CIVIL SITE PACKAGE FOR
OBA BAYSIDE GARAGES
24689 PELICAN PL.
ORANGE BEACH, AL

INDEX TO DRAWINGS

DRAWING NO.	DESCRIPTION
T001	TITLE SHEET
V001	TOPOGRAPHIC SURVEY
C001	GENERAL NOTES AND LEGENDS
C100	SITE DEMOLITION PLAN
C110	STORM WATER POLLUTION PREVENTION PLAN
C200	CIVIL SITE PLAN
C210	SITE LAYOUT PLAN
C300	SITE GRADING PLAN
C310	SITE DRAINAGE PLAN
C311	SITE DRAINAGE PLAN AND PROFILE
C400	SITE UTILITY PLAN
C610	STORM WATER POLLUTION PREVENTION DETAILS
C620	CIVIL SITE DETAILS
C640	SITE GRADING AND DRAINAGE DETAILS
C650	SITE UTILITY DETAILS
C651	SITE UTILITY DETAILS
L100	LANDSCAPE PLAN

VICINITY MAP

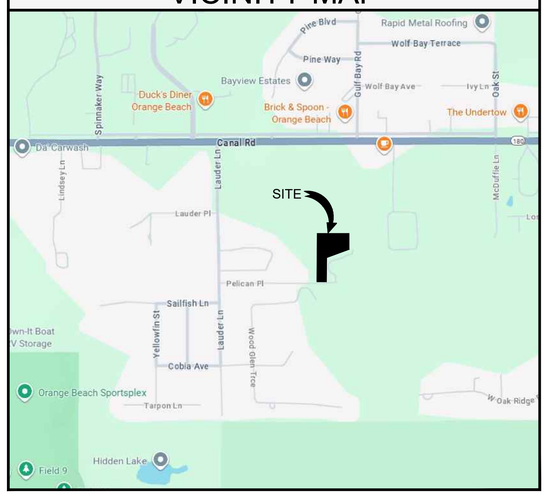

LOCATION MAP

THE ORIGINAL SIGNED, DATED AND SEALED ENGINEERING PLANS ARE THE OFFICIAL DOCUMENTS SUBMITTED TO THE APPROVING AUTHORITY FOR THESE PLANS. CONTRACTOR / SUBCONTRACTOR / AND/OR OWNER SHALL CONSULT ENGINEERED PLANS TO VERIFY ANY CONDITIONS OR RESTRICTIONS THAT MAY HAVE BEEN REQUIRED BY THE APPROVING AUTHORITY OR APPROVED BY THE REGISTERED ENGINEER OF RECORD. IF DISCREPANCIES OCCUR, THE ORIGINAL SIGNED, DATED AND SEALED ENGINEERED PLAN SET SHALL OVERRIDE ANY OTHER PLANS. THE DRAWINGS, DETAILS, AND NOTES THAT APPEAR ON THIS SHEET ARE COPYRIGHTED BY MACHADO | PATANO, PLLC, AND CLAIM ALL RIGHTS OF THE COPYRIGHT LAWS.
© COPYRIGHTED MATERIAL

YOUR PROJECT - OUR PRIORITY - NO EXCUSES

MP DESIGN GROUP
MACHADO · PATANO · KILPATRICK · JONES
918 Howard Ave Suite F
Biloxi, Mississippi 39530
P: 228.388.1950
www.mpdesigngroup.us

ALABAMA LICENSED PROFESSIONAL ENGINEER
NO. 27668
GERROD W. KILPATRICK
3-27-26

OBA BAYSIDE GARAGES
24689 PELICAN PL.
ORANGE BEACH, AL 36561

SCALE:	AS INDICATED
PROJECT NO:	0001.25.012
DRAWN BY:	MBN
CHECKED BY:	GWK

TITLE SHEET

NO.	DATE	REVISION / SUBMITTAL
REV A	03.12.2026	CITY PERMITTING
REV B	03.27.2026	CITY PERMITTING

T001

VERIFY SCALES
BAR IS ONE INCH ON ORIGINAL DRAWING
1"
IF NOT ONE INCH ON THIS SHEET, ADJUST SCALES ACCORDINGLY

PRINTED: 3/27/2026 8:03 AM BY: Blake Noblin LAST SAVED: 3/27/2026 8:02 AM BY: Bnoblin
m:\0001_machado patano\2025 o&e jobs\0001.25.012_oba bayside\02-civil\03-production\03-production drawings\oba bayside garages-site.dwg

PRINTED: 3/27/2026 8:03 AM BY: Blake Noblin LAST SAVED: 3/27/2026 8:02 AM BY: Bnoblin
m:\0001_machado patano\2025 o&e jobs\0001.25.012_oba bayside\02-civil\03-production\03-production drawings\oba bayside garages-site.dwg

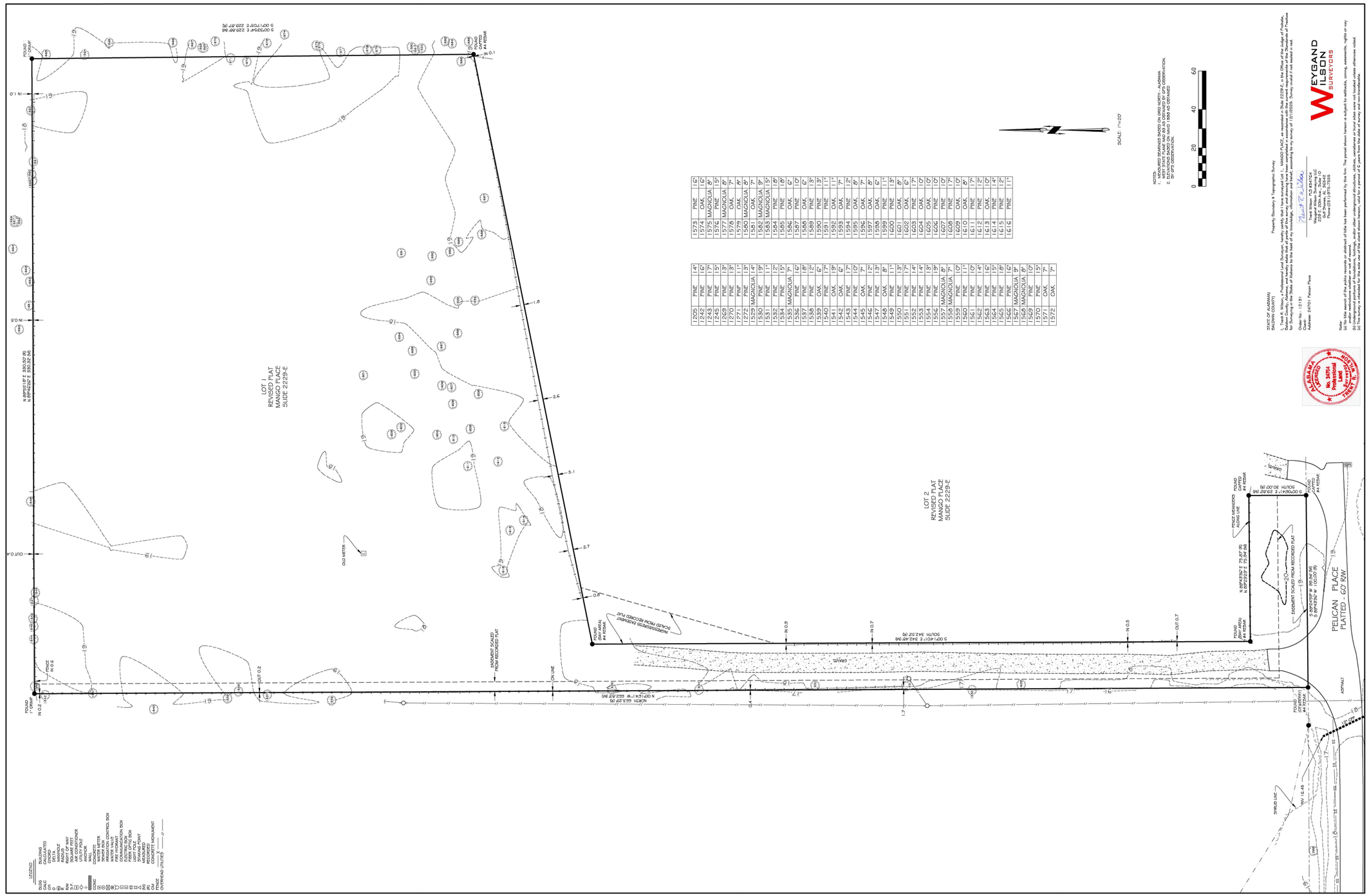

1573	PINE	16"
1574	OAK	12"
1575	MAGNOLIA	8"
1576	PINE	15"
1577	MAGNOLIA	8"
1578	OAK	7"
1579	PINE	8"
1580	MAGNOLIA	8"
1581	OAK	7"
1582	MAGNOLIA	9"
1583	MAGNOLIA	15"
1584	PINE	19"
1585	PINE	15"
1586	OAK	6"
1587	PINE	10"
1588	OAK	6"
1589	PINE	13"
1590	PINE	13"
1591	PINE	11"
1592	OAK	11"
1593	OAK	7"
1594	PINE	12"
1595	OAK	8"
1596	OAK	7"
1597	OAK	8"
1598	OAK	6"
1599	PINE	11"
1600	OAK	13"
1601	OAK	8"
1602	OAK	6"
1603	PINE	17"
1604	OAK	10"
1605	OAK	10"
1606	PINE	10"
1607	PINE	10"
1608	PINE	17"
1609	OAK	10"
1610	OAK	8"
1611	PINE	17"
1612	PINE	12"
1613	OAK	10"
1614	PINE	14"
1615	PINE	12"
1616	PINE	11"

1205	PINE	14"
1242	PINE	16"
1243	PINE	19"
1245	PINE	15"
1269	PINE	13"
1270	PINE	13"
1271	PINE	11"
1272	PINE	13"
1529	MAGNOLIA	14"
1530	PINE	19"
1531	PINE	11"
1532	PINE	12"
1534	PINE	15"
1535	MAGNOLIA	7"
1536	PINE	16"
1537	PINE	18"
1538	PINE	12"
1539	OAK	12"
1540	PINE	17"
1541	OAK	19"
1542	OAK	6"
1543	PINE	17"
1544	PINE	10"
1545	OAK	7"
1546	PINE	12"
1547	PINE	13"
1548	OAK	8"
1549	PINE	11"
1550	PINE	18"
1551	PINE	17"
1552	PINE	14"
1553	PINE	14"
1554	PINE	18"
1556	PINE	15"
1557	MAGNOLIA	8"
1558	MAGNOLIA	7"
1559	PINE	10"
1560	PINE	11"
1561	PINE	10"
1562	PINE	14"
1563	PINE	16"
1564	PINE	15"
1565	PINE	18"
1566	PINE	16"
1567	MAGNOLIA	9"
1568	MAGNOLIA	8"
1569	PINE	10"
1570	PINE	15"
1571	OAK	7"
1572	OAK	7"

SCALE: 1"=20'

0 20 40 60

NOTES:
1. ALL BEARINGS AND DISTANCES SHOWN ON GRID NORTH - ALABAMA WEST STATE PLANE 1802 AS ESTABLISHED BY GPS OBSERVATION.
2. ALL DISTANCES SHOWN ARE GROUND AS ESTABLISHED BY GPS OBSERVATION.

Property Boundary & Topographic Survey

STATE OF ALABAMA
BALDWIN COUNTY

I, Trent R. Wilson, a Professional Land Surveyor, hereby certify that I have surveyed Lot 1, MANGO PLACE, as recorded in Slide 2229-E, in the Office of the Judge of Probate, Baldwin County, Alabama, and that the plat hereon is a true and correct representation of said survey. This survey was performed in accordance with the Standards of Practice for Surveying in the State of Alabama to the best of my knowledge, information and belief, according to my survey of 12/1/2025. Survey invalid if not sealed in red.

Order No.: 12131
Date: 12/1/2025
Address: 24701 Pelican Place

Trent Wilson: PLS #34754
Weygand Ilson Surveyors, LLC
259 E. 20th Ave., Suite 10
Gulf Shores, AL 36542
Phone:(251) 979-2566

WEYGAND ILSON SURVEYORS

Notes:
(a) No title search of the public records or abstract of title has been performed by this firm. The parcel shown hereon is subject to setbacks, zoning, easements, rights-or-way and restrictions of record, which may affect the use and development of the property.
(b) Underground portions of foundations, footings, and/or other underground structures, utilities, and/or encroachments are not located unless otherwise noted.
(c) The bearing or distance for the entire run of the parcel shown hereon could be a portion of a greater line of record of same orientation.

THIS SURVEY IS PROVIDED FOR INFORMATIONAL PURPOSES ONLY!
(CONTRACTOR SHALL CONSULT ORIGINAL SURVEY FOR ANY PROPERTY INFORMATION AND EXISTING CONDITIONS)

THE ORIGINAL SIGNED, DATED AND SEALED ENGINEERING PLANS ARE THE OFFICIAL DOCUMENTS SUBMITTED TO THE APPROVING AUTHORITY FOR THESE PLANS. CONTRACTOR / SUBCONTRACTOR / AND/OR OWNER SHALL CONSULT ENGINEERED PLANS TO VERIFY ANY CONDITIONS OR RESTRICTIONS THAT MAY HAVE BEEN REQUIRED BY THE APPROVING AUTHORITY OR APPROVED BY THE REGISTERED ENGINEER OF RECORD. IF DISCREPANCIES OCCUR, THE ORIGINAL SIGNED, DATED AND SEALED ENGINEERED PLAN SET SHALL OVERRIDE ANY OTHER PLANS. THE DRAWINGS, DETAILS, AND NOTES THAT APPEAR ON THIS SHEET ARE COPYRIGHTED BY MACHADO | PATANO, PLLC, AND OJAM ALL RIGHTS OF THE COPYRIGHT LAWS.

YOUR PROJECT - OUR PRIORITY - NO EXCUSES

© COPYRIGHTED MATERIAL

MP DESIGN GROUP
MACHADO · PATANO · KILPATRICK · JONES
918 Howard Ave Suite F
Biloxi, Mississippi 39530
P: 228.388.1950
www.mpdesigngroup.us

ALABAMA LICENSED PROFESSIONAL ENGINEER
NO.27668
GERROD W. KILPATRICK
3/27/26

OBA BAYSIDE GARAGES

24689 PELICAN PL.
ORANGE BEACH, AL 36561

SCALE:	NOT TO SCALE
PROJECT NO:	0001.25.012
DRAWN BY:	MBN
CHECKED BY:	GWK

TOPOGRAPHIC SURVEY

NO.	DATE	REVISION / SUBMITTAL
REV A	03.12.2026	CITY PERMITTING
REV B	03.27.2026	CITY PERMITTING

V100

VERIFY SCALES
BAR IS ONE INCH ON ORIGINAL DRAWING
1"
IF NOT ONE INCH ON THIS SHEET, ADJUST SCALES ACCORDINGLY

SITE DEMOLITION NOTES

1. THE CONTRACTOR SHALL CALL ALABAMA ONE CALL (1-800-292-8525) BY LAW TO LOCATE ALL EXISTING UTILITIES ON SITE PRIOR TO THE START OF HIS WORK.
2. CONTRACTOR SHALL MAINTAIN EROSION AND SEDIMENT CONTROLS DURING THE ENTIRE COURSE OF WORK AS DETAILED ON THE STORM WATER POLLUTION PREVENTION PLANS. AND IN ACCORDANCE WITH THE STATE STORM WATER POLLUTION PREVENTION REQUIREMENTS.
3. ALL MATERIALS TO BE DEMOLISHED SHALL BE RECYCLED OR SALVAGED ACCORDING TO THE CONTRACTOR'S WASTE MANAGEMENT PLAN. ALL OTHER MATERIALS SHALL BE REMOVED FROM THE SITE AND DISPOSED OF OFF SITE IN A LEGAL LANDFILL. CONTRACTOR IS NOT ALLOWED TO STOCKPILE NON-RECYCLED OR NON-SALVAGED DEMOLITION MATERIALS ON SITE. ALL MATERIALS SHALL BE REMOVED IN A TIMELY FASHION.
4. WITHIN THE LIMITS OF WORK AND THE VICINITY OF CONSTRUCTION OPERATIONS, THE CONTRACTOR SHALL PROVIDE AND MAINTAIN TEMPORARY FENCING AROUND TREES TO REMAIN AND PROTECT SAID TREES DURING CONSTRUCTION.
5. THE CONTRACTOR IS RESPONSIBLE FOR CONTACTING THE ASSOCIATED UTILITY COMPANY AND COORDINATING ANY REQUIRED DISCONNECTS AND/OR CONNECTIONS TO EXISTING UTILITIES.
6. FINAL SITE CLEARING - THE SITE SHALL BE CLEAR OF ALL DEBRIS, DEMOLITION RELATED AND NON-RELATED (SITE TRASH).

STORMWATER POLLUTION PREVENTION NOTES

1. STOCKPILE TOPSOIL REMOVED FROM ROADWAY AREAS FOR USE LATER IN PLANTING PERMANENT GRASS ON ALL DISTURBED AREAS NOT USED AS PAVED ROADS, BUILDINGS ETC. CONTRACTOR SHALL PERFORM STOCKPILE PROTECTION AS REQUIRED TO PREVENT EROSION AND LOOSE DIRT FROM BEING WASHED FROM THE STOCKPILE.
2. CONTRACTOR SHALL STAGE, TIME AND SEQUENCE CONSTRUCTION TO MINIMIZE THE SIZE OF EXPOSED SOIL AREAS AND THE TIME BETWEEN EXPOSING THE SOIL AREA AND FINISHING THE SOIL AREA.
3. AS SOON AS GRADING IS COMPLETE IN AN AREA, THE CONTRACTOR SHALL STABILIZE THE SOIL. FOR LONG, NARROW AREAS OR STEEP GRADES (GREATER THAN 3:1), THE CONTRACTOR SHALL STABILIZE CONTINUOUSLY DURING GRADING OPERATIONS. ROUGH GRADED AREAS SHOULD BE STABILIZED WITH TEMPORARY EROSION CONTROL IF FINAL GRADING AND STABILIZATION WILL NOT BE PERFORMED WITHIN FIVE (5) DAYS. FAILURE TO STABILIZE IN A TIMELY MANNER AFTER GRADING MAY BE CONSIDERED A VIOLATION OF PERMITS OBTAINED FOR SAID ACTIVITY AND MAY BE SUBJECT TO CORRECTIVE ACTION BY THE LOCAL, STATE OR FEDERAL GOVERNING AUTHORITY.
4. IT SHALL BE THE RESPONSIBILITY OF THE CONTRACTOR PERFORMING A TASK TO PROVIDE EROSION CONTROL UNLESS ANOTHER PARTY HAS BEEN PREVIOUSLY SPECIFIED AS RESPONSIBLE FOR THE EROSION CONTROL ASSOCIATED WITH THAT TASK. IN THE EVENT ANOTHER PARTY IS RESPONSIBLE FOR EROSION CONTROL, THE CONTRACTOR SHALL STILL BE RESPONSIBLE FOR COORDINATION WITH THE PARTY RESPONSIBLE. IN THE EVENT THAT DAMAGE TO THE CONSTRUCTED ITEM RESULTS DUE TO LACK OF EROSION CONTROL, THE CONTRACTOR SHALL BE RESPONSIBLE FOR REPAIR AND/OR REPLACEMENT OF SAID EROSION CONTROL ITEMS AT NO CHARGE TO THE OWNER.
5. TEMPORARY EROSION CONTROL SHALL CONSIST OF TEMPORARY GRASS, TEMPORARY MULCH, TEMPORARY SOD, ARTIFICIAL COVERINGS, BALED HAY OR STRAW, SILT FENCES AND TURBIDITY BARRIERS AS SHOWN ON THE CONSTRUCTION DRAWINGS AND IN ACCORDANCE WITH THE BEST MANAGEMENT PRACTICES MANUAL FROM THE ALABAMA DEPARTMENT OF ENVIRONMENTAL MANAGEMENT, LATEST EDITION.
6. PERMANENT EROSION CONTROL SHALL CONSIST OF SEED, SEED AND MULCH, HYDRO-SEEDING, SOD AND/OR ARTIFICIAL COVERINGS AS SHOWN ON THE CONSTRUCTION PLANS AND IN ACCORDANCE WITH THE BEST MANAGEMENT PRACTICES MANUAL FROM THE ALABAMA DEPARTMENT OF ENVIRONMENTAL MANAGEMENT, LATEST EDITION.
7. TEMPORARY EROSION CONTROL BY ARTIFICIAL COVERINGS SHALL CONSIST OF STRAW BLANKETS, COCONUT FIBER BLANKETS, POLYESTER BLANKETS, JUTE MESH AND DRAINAGE FABRICS. MATERIALS SHALL BE INSTALLED IN ACCORDANCE WITH MANUFACTURER'S RECOMMENDATIONS. SEEDING SHALL BE INCLUDED IF MATERIAL REQUIRES VEGETATION TO FUNCTION PROPERLY.
8. THE CONTRACTOR IS TO PROVIDE EROSION CONTROL/SEDIMENTATION BARRIER (HAY BALES, SILT FENCE, TURBIDITY BARRIER OR AS SPECIFIED IN THE CONSTRUCTION DRAWINGS) TO PREVENT SILTATION OF ADJACENT PROPERTY, STREETS, STORM SEWERS, WATERWAYS AND WETLAND OR JURISDICTIONAL AREAS. IF, IN THE OPINION OF THE ENGINEER AND/OR REGULATORY AUTHORITIES, EXCESSIVE QUANTITIES OF MATERIAL ARE TRANSPORTED OFF-SITE BY EROSION OR STORMWATER RUNOFF, THE CONTRACTOR SHALL IMPROVE CONDITIONS TO THE SATISFACTION OF THE ENGINEER AND/OR LOCAL, STATE OR FEDERAL GOVERNING AUTHORITIES AT NO ADDITIONAL COST TO THE OWNER. IN NO CASE SHALL CONSTRUCTION COMMENCE PRIOR TO INSTALLATION OF EROSION CONTROL/SEDIMENTATION BARRIER.
9. PLACE STONE CHECK DAM IN ALL NATURAL OR CREATED DRAINAGEWAYS WHERE PIPES DISCHARGE WATER TO TRAP SEDIMENT ON SITE AND DO NOT ALLOW IT TO GO ONTO ADJACENT PROPERTY. ALL SEDIMENT AND EROSION CONTROL STRUCTURES SHALL BE INSTALLED BY A METHOD ACCEPTABLE TO THE ENGINEER AND/OR TO THE LOCAL, STATE OR FEDERAL GOVERNING AUTHORITIES AT NO ADDITIONAL COST TO THE OWNER.
10. SEED ALL SWALES AND DITCHES TO SOME TYPE OF PERMANENT GRASS WHERE SLOPE OF LAND DOES NOT EXCEED 2%.
11. ALL SEDIMENT AND EROSION CONTROL STRUCTURES, INCLUDING BASINS, GRAVEL FILTERS, SILT FENCE AND TRAPS SHALL BE INSPECTED EVERY 7 DAYS AND AFTER ALL RAINFALLS IN EXCESS OF 0.5". AN INSPECTION REPORT SHALL BE MADE ON EACH OCCASION, NOTING CONDITION OF ALL STRUCTURES AND OUTLINING ANY REQUIRED MAINTENANCE. ALL STRUCTURES SHALL BE CLEANED AND REESTABLISHED WHEN SEDIMENT REACHES 50% OF STORAGE CAPACITY.
12. THE CONTRACTOR SHALL BE FAMILIAR WITH, AND KNOWLEDGEABLE OF, ALL FEDERAL, STATE, AND LOCAL CODES, REQUIREMENTS, REGULATIONS AND SPECIFICATIONS REGARDING THE CONSTRUCTION OF THIS PROJECT. ALL MATERIALS, WORKMANSHIP, INSTALLATION AND RESTORATION SHALL MEET OR EXCEED MINIMUM REQUIREMENTS. LACK OF DETAILS ON THE PLANS OR ABSENCE OF SPECIFIC INFORMATION SHALL NOT RELIEVE THE CONTRACTOR OF COMPLYING WITH ALL APPLICABLE CODES, REQUIREMENTS AND SPECIFICATIONS.
13. PROVIDE A TEMPORARY STONE SPLASH PAD AT ALL FIRE HYDRANTS OR OTHER POINTS OF DISCHARGE DURING TESTING OF THE WATER DISTRIBUTION SYSTEM.
14. CUT OR FILL SLOPES WHICH EXCEED (8) VERTICAL FEET SHOULD BE STABILIZED WITH SYNTHETIC OR VEGETATIVE MATS, IN ADDITION TO HYDROSEEDING. IT MAY BE NECESSARY TO INSTALL TEMPORARY SLOPE DRAINS DURING CONSTRUCTION. TEMPORARY BERMS MAY BE NEEDED DAILY UNTIL THE SLOPE IS BROUGHT TO GRADE.
15. ALL EROSION CONTROL DEVICES SHALL BE PROPERLY MAINTAINED DURING ALL PHASES OF CONSTRUCTION ACTIVITIES AND ALL DISTURBED AREAS HAVE BEEN STABILIZED. ADDITIONAL CONTROL DEVICES MAY BE REQUIRED DURING CONSTRUCTION IN ORDER TO CONTROL EROSION AND/OR OFFSITE SEDIMENTATION. ALL TEMPORARY CONTROL DEVICES SHALL BE REMOVED ONCE CONSTRUCTION IS COMPLETE AND THE SITE IS STABILIZED. ANY ADDITIONAL TEMPORARY CONTROL DEVICES THAT MAY BE REQUIRED SHALL BE PROVIDED AS PART OF THIS PROJECT AT NO ADDITIONAL COST TO THE OWNER.
16. THE PROPOSED WORK ITEMS SHOWN ON THESE PLANS DOES NOT RELIEVE THE CONTRACTOR OF ENSURING THAT ALL LOCAL, STATE AND FEDERAL REQUIREMENTS FOR STORM WATER POLLUTION PREVENTION, WATER QUALITY AND ILLEGAL POINT SOURCE DISCHARGE ARE STRICTLY ADHERED TO. ANY AND ALL ACTION NECESSARY TO BE IN COMPLIANCE WITH ALL REGULATIONS SHALL BE THE SOLE RESPONSIBILITY OF THE CONTRACTOR.

SEQUENCING OF SITE WORK AND RELATED EROSION CONTROL DEVICES

THE CONSTRUCTION PHASE SHOULD BE DIVIDED INTO THREE PHASES OF BEST MANAGEMENT PRACTICES IMPLEMENTATION (BMP). THE FOLLOWING IS A SUGGESTED PHASING PROCESS. THE CONTRACTOR SHALL BE RESPONSIBLE FOR REVIEWING THE CONSTRUCTION PLANS, ALABAMA DEPARTMENT OF ENVIRONMENTAL MANAGEMENT BEST MANAGEMENT PRACTICES MANUAL, LATEST EDITION AND ANY OTHER INFORMATION THAT MAY BE RELEVANT TO THE IMPLEMENTATION AND PREPARATION OF A STORMWATER POLLUTION PREVENTION PLAN BEST SUITED FOR THIS PROJECT:

PHASE I: START UP AND PERIMETER CONTROLS

- CONTRACTOR SHALL POST ALL SITE AND STORMWATER CONTROL PERMITS AS REQUIRED BY EACH INDIVIDUAL PERMIT.
- CONTRACTOR SHALL INSTALL PERIMETER CONTROLS. PREFERABLY, THESE SHOULD BE INSTALLED AFTER CLEARING AND PRIOR TO ANY GRUBBING OF THE SITE. FOR LARGER AREAS, CLEARING OF AN AREA THE WIDTH OF A BULLDOZER AND INSTALLING THE PERIMETER CONTROLS SHOULD BE PERFORMED PRIOR TO CLEARING THE INTERIOR PORTIONS OF THE SITE.
- HOLD PRE-CONSTRUCTION CONFERENCE AT LEAST ONE (1) WEEK PRIOR TO STARTING CONSTRUCTION AND PERFORM WEEKLY REVIEWS OF THE EROSION SEDIMENT AND STORMWATER CONTROL PLAN.
- REMOVE VEGETATION, UNDERGROWTH AND TOP SIX (6) INCHES OF ORGANIC MATERIAL FROM THE SITE AND STOCKPILE TOPSOIL. CONTRACTOR SHALL PERFORM STOCKPILE PROTECTION AS REQUIRED TO PREVENT LOOSE DIRT FROM BEING WASHED FROM THE STOCKPILE.
- PLACE TEMPORARY SANITARY FACILITIES AND DUMPSTERS.

PHASE II: INTERMEDIATE CONTROLS

- INTERMEDIATE CONTROLS ARE IMPLEMENTED FROM GRUBBING TO FINAL GRADE. THIS INCLUDES INSTALLATION OF SUBSURFACE DRAINAGE, INLETS AND UTILITIES AND BRINGING THE SITE TO FINAL GRADE. DURING THIS PHASE, THE EXTENT AND DURATION OF EXPOSURE OF UN-STABILIZED AREAS IS GREATEST, THE CONTRACTOR SHALL TAKE ANY ADDITIONAL MEASURES REQUIRED TO PREVENT ADDITIONAL STORMWATER OR SEDIMENTATION RUNOFF AT NO ADDITIONAL COST TO THE OWNER.

PHASE III: FINAL CONTROLS

- THESE CONTROLS ARE IMPLEMENTED TO ACHIEVE FINAL STABILIZATION OF THE SITE. THE CONSTRUCTION OF HARD SURFACES AND FINAL PAVEMENT, STRUCTURES AND UTILITIES ARE INSTALLED. THIS PHASE ESTABLISHES THE PERMANENT VEGETATION, RETENTION/DETENTION PONDS FACILITIES AND THE INSTALLATION OF ANY OUTLET PROTECTIONS, ENERGY DISSIPATERS ROCK CHECK DAMS, ETC. AT FINAL STABILIZATION, USEPA (1992) GUIDELINES STATES THAT PERMANENT VEGETATION MUST BE UNIFORMLY ESTABLISHED ON AT LEAST 70 PERCENT OF SOIL SURFACES NOT COVERED WITH EROSION-RESISTANT SURFACES (PAVEMENTS, BUILDINGS, ETC.). ALL PERMANENT DRAINAGE IMPROVEMENTS MUST BE INSTALLED AND TESTED TO VERIFY THAT THEY PERFORM AS DESIGNED. THE STORMWATER MANAGEMENT SYSTEM SHOULD BE CHECKED AND CLEANED OF ANY ACCUMULATED SEDIMENTS. TEMPORARY BMP'S NOT REQUIRED AS PART OF THE PERMANENT STABILIZATION OR BMP PLAN SHALL BE REMOVED AND PROPERLY DISPOSED OF. THE CONTRACTOR SHALL BE RESPONSIBLE FOR CLEANING ANY AND ALL SEDIMENT, DEBRIS, ETC., FROM THE STORMWATER INLETS, PIPE SYSTEMS, RETENTION/DETENTION PONDS, ETC. AS MAY BE REQUIRED TO CREATE A FULLY FUNCTIONAL STORMWATER MANAGEMENT SYSTEM AT NO ADDITIONAL COST TO THE OWNER.

OTHER POLLUTION SOURCES CONTROL NOTES

1. MAINTENANCE AND REPAIR OF CONSTRUCTION EQUIPMENT SHALL BE CONFINED TO ONE AREA - LOCATED ON A LEVEL AREA, AS FAR FROM CREEKS AND WETLANDS AREAS AS POSSIBLE. STORAGE CONTAINERS AND WASTE DISPOSAL RECEPTACLES SHALL BE PROVIDED AT THIS AREA FOR OILS, FUELS, GREASE, SOLVENTS, ETC., THAT ARE USED ON THE SITE. THE MAINTENANCE AREA SHALL BE INSPECTED AND CLEANED DAILY. DISPOSAL RECEPTACLES SHALL BE EMPTIED WEEKLY, PROPERLY AND IN A LEGAL MANNER.
2. ANY FUEL STORAGE TANKS KEPT ON THE SITE SHALL BE PROVIDED WITH SECONDARY CONTAINMENT; THIS SHALL CONSIST OF A PAN UNDER THE TANK, LINED CONTAINMENT AREA WITH BERMS OR CONCRETE CONTAINMENT AREA, TO CONTAIN ANY LEAKAGE OR SPILLAGE WHICH MAY OCCUR FROM THE TANK DURING USE AND NON-USE TIMES.
3. TRASH RECEPTACLES AND OTHER WASTE-HOLDING FACILITIES SHALL BE UTILIZED AT ONE OR TWO LOCATIONS ON THE PROJECT SITE TO CONTAIN WASTES AND PREVENT ITS MOVEMENT DOWN-GRADE OR OFFSITE. THESE FACILITIES SHALL BE EMPTIED AND WASTE DISPOSED OF ON A WEEKLY BASIS, OR MORE OFTEN AS NEEDED.
4. THE CONTRACTOR SHALL TAKE NECESSARY ACTION AS REQUIRED TO MINIMIZE THE TRACKING OF MUD/SOIL ONTO THE PAVED ROADWAY FROM THE CONSTRUCTION AREA. THE CONTRACTOR SHALL DAILY REMOVE MUD/SOIL FROM PAVEMENT, AS MAY BE REQUIRED.
5. WASHING OF CONSTRUCTION VEHICLES ON THE SITE WILL NOT BE ALLOWED. VEHICLES SHALL BE TRANSPORTED TO THE CONTRACTOR'S YARD AND WASHED AS NEEDED.
6. THE STORAGE OF ALL HAZARDOUS MATERIALS, FERTILIZERS, CHEMICALS, CEMENTS, SOLVENTS, PAINTS, OR OTHER POTENTIAL WATER POLLUTANTS SHALL BE LOCATED IN AN ISOLATED, LEVEL AREA, FAR FROM CREEK/WETLAND AREAS, WHERE THEY WILL NOT CAUSE POLLUTION DUE TO RUNOFF FROM THEM DURING RAINFALL EVENTS AND SHALL BE STORED IN A HAZMAT APPROVED FACILITY. ALL MSDS SHEETS FOR EACH HAZARDOUS MATERIAL SHALL BE KEPT IN THE HAZMAT STORAGE FACILITY AND A COPY OF THE MSDS SHEET SHALL BE KEPT IN THE GENERAL CONTRACTOR'S OFFICE. TOXIC CHEMICALS AND MATERIALS, SUCH AS PESTICIDES, PAINTS AND ACIDS, SHALL BE STORED ACCORDING TO THE MANUFACTURER'S GUIDELINES. CARE SHALL BE TAKEN TO PREVENT ACCIDENTAL SPILLAGE DURING USE OF THE MATERIALS. CONTAINERS SHALL NOT BE WASHED IN OR NEAR FLOWING STREAMS OR STORMWATER HANDLING SYSTEMS (INLETS, DITCHES, PONDS, ETC.).
7. ADEQUATE SANITARY FACILITIES SHALL BE PROVIDED FOR WORKERS ON THE SITE IN ACCORDANCE WITH HEALTH DEPARTMENT REGULATIONS. THESE FACILITIES SHALL BE REGULARLY EMPTIED AND MAINTAINED AND PLACED AWAY FROM CREEKS/WETLANDS AS FAR AS POSSIBLE AND ANCHORED TO PREVENT OVERTURNING, AS NEEDED.
8. CONTRACTOR SHALL PERFORM A DAILY WALK THRU OF THE PROJECT SITE TO PICK UP ANY LOOSE DEBRIS, LITTER OR TRASH AND DISPOSE OF ALL ITEMS IN THE WASTE RECEPTACLES SHOWN.

GENERAL NOTES

1. THE CONTRACTOR SHALL FURNISH THE ENGINEER WITH TWO SETS OF "AS-BUILT" DRAWINGS PRIOR TO REQUESTING A FINAL INSPECTION. THE "AS-BUILT" DRAWINGS SHALL SHOW THE LOCATIONS OF ALL SEWER AND WATER STRUCTURES, LINES, BENDS, AND APPURTENANCES. GRADES ON STORM SEWER LINES SHALL ALSO BE FURNISHED ON "AS-BUILT" DRAWINGS.
2. INSTALLATION OF ANY GRAVITY FLOW PIPE, SUCH AS SANITARY SEWER OR STORM DRAIN, SHALL REQUIRE THAT THE CONTRACTOR START AT THE LOWEST CONNECTION POINT ELEVATION, AND WORK IN THE UPHILL DIRECTION. IF, IN THE BEST INTEREST OF THE PROJECT, THE CONTRACTOR WISHES TO INITIATE PIPE LAYING AT SOME LOCATION OTHER THAN THE LOWEST CONTROL, IT SHALL BE THE CONTRACTOR'S RESPONSIBILITY TO CONFIRM A SATISFACTORY CONNECTION TO THE LOWEST CONTROL, PRIOR TO BEGINNING CONSTRUCTION AT SOME POINT OTHER THAN THE LOWEST CONTROL ELEVATION, THE CONTRACTOR SHALL REQUEST, IN WRITING, AND RECEIVE, IN WRITING, APPROVAL FROM THE DESIGN ENGINEER, WHOSE NAME APPEARS ON THESE PLANS. SANITARY SEWER MAINS OR SERVICES WITH LESS THAN THREE FEET OF COVER SHALL BE DUCTILE IRON PIPE. WHEREVER A SANITARY SEWER SERVICE CROSSES OVER OR UNDER A STORM DRAIN PIPE AND/OR A WATER MAIN, THE SERVICE SHALL BE EXTENDED A MINIMUM OF FIVE FEET BEYOND THE FURTHEST PIPELINE. IN NO CASE, WITHOUT THE ENGINEERS WRITTEN APPROVAL, SHALL THE CONTRACTOR TERMINATE THE SANITARY SEWER SERVICE AT A LOCATION THAT WOULD REQUIRE THE BUILDING PLUMBER TO CROSS THE STORM DRAIN PIPE AND/OR WATER MAIN.

SITE NOTES

1. CONTRACTOR SHALL BE RESPONSIBLE FOR OBTAINING ALL PERMITS FOR THIS PROJECT PRIOR TO COMMENCEMENT OF ANY CONSTRUCTION OR DEMOLITION.
2. CONTRACTOR SHALL PROVIDE ADEQUATE PROTECTION TO PREVENT DAMAGE TO ALL TREE ROOTS DURING ENTRENCHING AND ANY OTHER CONSTRUCTION THAT MAY ENDANGER THE HEALTH OF THE TREES ACCORDING TO THE LOCAL MUNICIPALITIES REQUIREMENTS.
3. CONTRACTOR SHALL BE RESPONSIBLE FOR COORDINATING WITH ANY AND ALL UTILITY COMPANIES IN REGARDS TO UTILITIES THAT MAY NEED TO BE RELOCATED AS PART OF THIS WORK.
4. CONTRACTOR SHALL PROVIDE PROPER TRAFFIC CONTROL WARNING SIGNS THROUGH THE DURATION OF THE PROJECT. ALL SIGNAGE SHALL BE IN ACCORDANCE WITH THE "MANUAL ON UNIFORM TRAFFIC CONTROL DEVICES" (MUTCD), LATEST EDITION.
5. CONTRACTOR SHALL NOTIFY ALL AGENCIES AT LEAST SEVENTY-TWO (72) HOURS IN ADVANCE OF ANY ROAD CLOSINGS. THIS NOTIFICATION SHALL INCLUDE, BUT NOT BE LIMITED TO, POLICE, FIRE AND SCHOOL ALONG WITH ALL REGULATORY AND GOVERNMENTAL AGENCIES.
6. CONTRACTOR SHALL BE RESPONSIBLE FOR PUBLIC NOTICE OF EACH ROAD CLOSING. CONTRACTOR SHALL FOLLOW ALL GUIDELINES FOR PUBLIC NOTICE AS ESTABLISHED BY CITY, COUNTY AND/OR STATE OFFICIALS. ANY DELAY IN CONSTRUCTION DUE TO CONTRACTOR NOT NOTIFYING THE PROPER AUTHORITIES OR NOT FOLLOWING THE REGULATORY AGENCY REQUIREMENTS SHALL BE THE CONTRACTOR'S RESPONSIBILITY.
7. IF TRAFFIC INTERRUPTIONS ARE REQUIRED, THEY SHALL BE KEPT TO A MINIMUM AND THE CONTRACTOR SHALL BE SUBJECT TO LOCAL LAWS IN REGARDS TO TRAFFIC INTERRUPTIONS.
8. CONTRACTOR SHALL BE RESPONSIBLE FOR THE PROTECTION OF TREES SHOWN TO REMAIN. CONTRACTOR SHALL PROTECT TREES AS REQUIRED BY THE LOCAL MUNICIPALITIES TREE ORDINANCE AND/OR LAND DEVELOPMENT CODE.
9. ALL PERVIOUS AREAS DISTURBED DURING CONSTRUCTION SHALL RECEIVE NEW SOD OR SHALL BE SEEDED OR MULCHED. MINIMUM, AFTER COMPLETION AND APPROVAL OF WORK IN THAT AREA.
10. CONTRACTOR SHALL INSTALL HANDICAP PARKING, SYMBOLS AND RAMPS PER A.D.A. REQUIREMENTS.
11. CONTRACTOR SHALL STRIPE ALL HANDICAP PARKING SPACES BLUE. ALL OTHER STRIPING SHALL BE WHITE.
12. ANY EXISTING SITE DEBRIS AND/OR EXISTING STRUCTURES SHALL BE COMPLETELY REMOVED PRIOR TO CONSTRUCTION AS PER DEMOLITION PLAN.

SITE LAYOUT NOTES

1. CONTRACTOR SHALL BE RESPONSIBLE FOR VERIFYING ALL DIMENSIONS AS SHOWN ON THE PLANS. ANY DISCREPANCIES SHALL BE BROUGHT TO THE IMMEDIATE ATTENTION OF THE ENGINEER.
2. EXTREME CARE HAS BEEN TAKEN IN DETERMINING LAYOUT DIMENSIONS. CONTRACTOR SHALL ONLY SCALE AREAS IN WHICH NO DIMENSION IS SHOWN. CONTRACTOR SHALL VERIFY SCALE AND CONTACT ENGINEER IF ANY DISCREPANCIES OCCUR. IN NO CASE SHALL CONTRACTOR SCALE THE DRAWING TO OVERRIDE A SHOWN DIMENSION.
3. CONTRACTOR SHALL CONSULT AND VERIFY ALL BUILDING DIMENSIONS WITH THE BUILDING PLANS AND THE FOUNDATION PLANS. IF ANY DISCREPANCIES ARISE, THE BUILDING PLANS AND/OR THE FOUNDATION PLAN OVERRIDE ANY DIMENSIONS ON THIS PLAN. CONTRACTOR SHALL BE RESPONSIBLE FOR NOTIFYING ENGINEER IF ANY SAID DISCREPANCIES MAY AFFECT THE LAYOUT OF THE SITE PLAN.

SITE GRADING & DRAINAGE NOTES

1. EXISTING CONTOUR INTERVALS SHOWN ARE HALF FOOT (0.5').
2. PROPOSED CONTOUR INTERVALS SHOWN ARE HALF FOOT (0.5').
3. THE CONTRACTOR IS SPECIFICALLY CAUTIONED THAT THE LOCATION AND/OR ELEVATION OF EXISTING UTILITIES AS SHOWN ON THESE PLANS IS BASED ON RECORDS OF THE VARIOUS UTILITY COMPANIES AND WHERE POSSIBLE, MEASUREMENTS TAKEN IN THE FIELD. THE INFORMATION IS NOT TO BE RELIED ON AS BEING EXACT OR COMPLETE. THE CONTRACTOR MUST CALL THE APPROPRIATE UTILITY COMPANY AT LEAST 72 HOURS BEFORE ANY EXCAVATION TO REQUEST EXACT FIELD LOCATION OF UTILITIES. IT SHALL BE THE CONTRACTOR'S RESPONSIBILITY TO RELOCATE ALL EXISTING UTILITIES WHICH CONFLICT WITH THE PROPOSED IMPROVEMENTS SHOWN ON THE PLANS.
4. CONTRACTOR SHALL BE RESPONSIBLE FOR VERIFYING HORIZONTAL AND VERTICAL LOCATIONS OF ALL EXISTING STORM SEWER STRUCTURES, PIPES, ETC., AND ALL UTILITIES PRIOR TO CONSTRUCTION.
5. CLEARING AND GRUBBING LIMITS SHALL INCLUDE ALL AREAS DISTURBED BY GRADING OPERATIONS. CONTRACTOR IS RESPONSIBLE FOR THE PROTECTION OF ALL UNDISTURBED AREAS, ALL PROPERTY CORNERS AND REPLACING ALL PINS ELIMINATED OR DAMAGED DURING CONSTRUCTION.
6. CONTRACTOR SHALL BE RESPONSIBLE FOR FAMILIARIZING HIMSELF WITH ALL LOCAL GOVERNING CODES AND SHALL COMPLY WITH SAID CODES.
7. CONTRACTOR SHALL BE RESPONSIBLE FOR REPAIRS OF DAMAGE TO ANY EXISTING IMPROVEMENTS DURING CONSTRUCTION, SUCH AS, BUT NOT LIMITED TO, DRAINAGE, UTILITIES, PAVEMENT, STRIPING, CURBS, ETC. REPAIRS SHALL BE EQUAL TO OR BETTER THAN THE EXISTING CONDITIONS.

UTILITY NOTES

1. CONTRACTOR SHALL BE RESPONSIBLE FOR VERIFYING LOCATIONS OF ALL PROJECT RELATED UTILITIES, BURIED AND ABOVE GROUND, REGARDLESS OF INCLUSION ON THESE PLANS. THE LOCATIONS OF ANY EXISTING UTILITIES SHOWN ARE APPROXIMATE ONLY. THE CONTRACTOR SHALL BE RESPONSIBLE FOR DETERMINING THE EXACT LOCATIONS OF ALL EXISTING UTILITIES BEFORE COMMENCING WORK. ALL CONTRACTOR DAMAGED UTILITIES SHALL BE REPAIRED AT THE CONTRACTOR'S EXPENSE.
2. SITE CONTRACTOR SHALL BE RESPONSIBLE FOR STUB OUT OF ALL UTILITIES TO WITHIN 5' OF THE BUILDING. SITE CONTRACTOR SHALL COORDINATE LOCATION AND STUB OUT REQUIREMENTS PER ARCHITECTURAL/PLUMBING/ELECTRICAL, ETC. PRIOR TO COMMENCEMENT OF CONSTRUCTION. TIE IN LOCATIONS WERE SHOWN AS PER SURVEY OR LOCATED/PROVIDED BY LOCAL UTILITY AUTHORITY AND EXACT LOCATIONS HAVE NOT BEEN VERIFIED. CONTRACTOR SHALL BE RESPONSIBLE FOR CONTACTING LOCAL UTILITY DEPARTMENT TO VERIFY LOCATION OF SEWER AND WATER CONNECTIONS.
3. CONTRACTOR SHALL NOTIFY THE APPROPRIATE UTILITY AT LEAST 48 HOURS PRIOR TO COMMENCING CONSTRUCTION HAVING POTENTIAL IMPACT TO THE UTILITY'S STRUCTURE.
4. WATER SERVICE SHALL BE MAINTAINED TO ALL EXISTING CUSTOMERS; IF ANY SERVICE MUST BE INTERRUPTED, THE AFFECTED CUSTOMERS SHALL BE NOTIFIED AT LEAST 48 HOURS IN ADVANCE BY THE CONTRACTOR.
5. CONTRACTOR SHALL PROVIDE A MINIMUM COVER OF 36", MINIMUM, ON ALL WATER MAINS.
6. NEW WATER MAIN SHALL MAINTAIN 18" VERTICAL SEPARATION BETWEEN WATER MAIN AND STORM DRAIN PIPES, WHERE CROSSINGS OCCUR. WATER MAIN SHALL BE ROUTED OVER STORM PIPE WHEREVER POSSIBLE.
7. ALL WATER LINE FITTINGS 4 INCHES IN DIAMETER AND LESS SHALL BE OF THE SAME MATERIAL AS THE PIPE (i.e., PVC) AND SHALL BE CONSISTENT THEREWITH IN STRENGTH, DIMENSIONS AND FUNCTION.
8. CONTRACTOR SHALL INSTALL THRUST BLOCKS AT ALL BENDS AND FITTINGS (SEE DETAIL SHEET).
9. CONTRACTOR SHALL INSTALL LOCATOR WIRE AROUND ALL NEW INSTALLED PIPE AND FITTINGS.
10. ALL PROPOSED POTABLE WATER LINE FITTINGS, FIRE HYDRANTS AND ALL OTHER WATER LINE PIPING MATERIALS AND FITTINGS FOR THIS PROJECT SHALL BE AWWA APPROVED.
11. CONTRACTOR SHALL INSTALL ALL WATER LINES AND FITTINGS AS PER MANUFACTURER'S INSTALLATION RECOMMENDATIONS.
12. EXISTING WATER AND SANITARY SERVICE LINES SHOWN ARE APPROXIMATE LOCATIONS ONLY. CONTRACTOR SHALL BE RESPONSIBLE FOR HAVING THESE LINES LOCATED AND COORDINATE TIE IN LOCATIONS WITH THE BUILDING CONTRACTOR.
13. CONTRACTOR SHALL BE RESPONSIBLE FOR VERIFYING THE EXISTING BUILDING SANITARY SEWER PIPE ELEVATION AND DETERMINE THE ELEVATION REQUIRED TO CONNECT TO THE EXISTING SEWER LINES.
14. CONTRACTOR SHALL BE RESPONSIBLE FOR INSTALLING ALL SEWER LINES TO INSURE POSITIVE FLOW OF SEWER LINES.
15. THESE PLANS ARE SUBJECT TO APPROVAL BY THE LOCAL GOVERNING MUNICIPALITY AND ANY OTHER GOVERNING AUTHORITY.
16. ENGINEER HAS ATTEMPTED TO UTILIZE APPARENT EXISTING UTILITIES ON THE SITE, HOWEVER THE FUNCTION OR FEASIBILITY OF UTILIZING THESE APPARENT UTILITIES HAS NOT BEEN FIELD VERIFIED. THE ENGINEER DOES NOT WARRANT TO THE OWNER OR THE CONTRACTOR THAT THESE UTILITIES CAN BE USED. THIS SHOULD BE FIELD VERIFIED BY THE CONTRACTOR AND BE ACCOUNTED FOR APPROPRIATELY IN THE COSTING OF THE PROJECT.

ALABAMA ONE CALL

THE CONTRACTOR SHALL BE RESPONSIBLE FOR LOCATING UNDERGROUND UTILITIES PRIOR TO ANY CONSTRUCTION (INCLUDING BUT NOT LIMITED TO: WATER LINES, SEWER LINES, ELECTRICAL AND TELECOMMUNICATION LINES, AND FIBER OPTIC CABLES.)

ALABAMA ONE CALL SYSTEM
SERVICE AT:
1-800-292-8525
OR
www.al811.org

AT LEAST 3 DAYS BEFORE ANY CONSTRUCTION

YOUR PROJECT - OUR PRIORITY - NO EXCUSES
© COPYRIGHTED MATERIAL
THE ORIGINAL SIGNED, DATED AND SEALED ENGINEERING PLANS ARE THE OFFICIAL DOCUMENTS SUBMITTED TO THE APPROVING AUTHORITY FOR THESE PLANS. CONTRACTOR / SUBCONTRACTOR / AND/OR OWNER SHALL CONSULT ENGINEERED PLANS TO VERIFY ANY CONDITIONS OR RESTRICTIONS THAT MAY HAVE BEEN REQUIRED BY THE APPROVING AUTHORITY OR APPROVED BY THE REGISTERED ENGINEER OF RECORD. IF DISCREPANCIES OCCUR, THE ORIGINAL SIGNED, DATED AND SEALED ENGINEERED PLAN SET SHALL OVERRIDE ANY OTHER PLANS. THE DRAWINGS, DETAILS, AND NOTES THAT APPEAR ON THIS SHEET ARE COPYRIGHTED BY MACHADO | PATANO, PLLC, AND CLAIM ALL RIGHTS OF THE COPYRIGHT LAWS.

MP DESIGN GROUP
MACHADO · PATANO · KILPATRICK · JONES
918 Howard Ave Suite F
Biloxi, Mississippi 39530
P: 228.388.1950
www.mpdesigngroup.us

ALABAMA LICENSED PROFESSIONAL ENGINEER GERROD W. KILPATRICK NO. 27668 3-27-26

OBA BAYSIDE GARAGES
24689 PELICAN PL.
ORANGE BEACH, AL 36561

SCALE: AS INDICATED
PROJECT NO: 0001.25.012
DRAWN BY: MBN
CHECKED BY: GWK

GENERAL NOTES AND LEGENDS

NO.	DATE	REVISION / SUBMITTAL
REV A	03.12.2026	CITY PERMITTING
REV B	03.27.2026	CITY PERMITTING

C001

VERIFY SCALES
BAR IS ONE INCH ON ORIGINAL DRAWING
1"
IF NOT ONE INCH ON THIS SHEET, ADJUST SCALES ACCORDINGLY

PRINTED: 3/27/2026 8:03 AM BY: Blake Noblin LAST SAVED: 3/27/2026 8:02 AM BY: Bnoblin
m:\0001_machado patano\2025

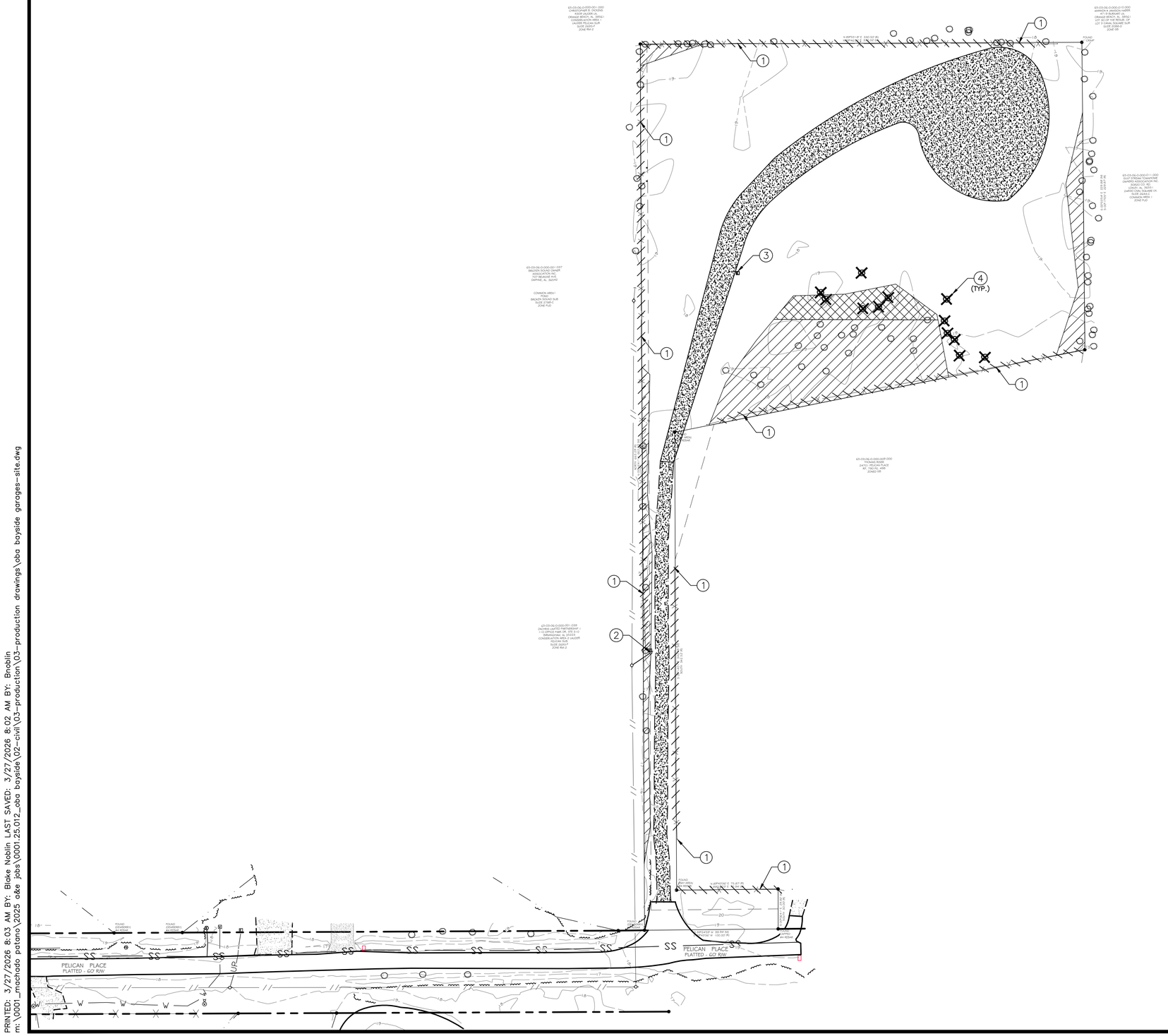

DEMOLITION NOTES

1. CONTRACTOR SHALL REMOVE FENCING, AS INDICATED. CONTRACTOR SHALL BE RESPONSIBLE FOR REMOVAL AND DISPOSAL OF ANY AND ALL DEBRIS RELATED TO THIS ITEM.
2. CONTRACTOR SHALL REMOVE POWER POLE AND POLE MOUNTED TRANSFORMER. CONTRACTOR SHALL BE RESPONSIBLE FOR CONTACTING POWER COMPANY TO COORDINATE DISCONNECTION OF SERVICE FROM THE POLE TO REMAIN. CONTRACTOR SHALL BE RESPONSIBLE FOR REMOVAL AND DISPOSAL OF ANY AND ALL DEBRIS RELATED TO THIS ITEM.
3. CONTRACTOR SHALL REMOVE EXISTING METER BOX AND ASSOCIATED UTILITIES WITHIN CONSTRUCTION LIMITS. CONTRACTOR SHALL BE RESPONSIBLE FOR CONTACTING ALL UTILITIES AND COORDINATING THE DISCONNECTION OF ANY AND ALL UTILITIES. CONTRACTOR SHALL BE RESPONSIBLE FOR REMOVAL AND DISPOSAL OF ANY AND ALL DEBRIS RELATED TO THIS ITEM.
4. CONTRACTOR SHALL REMOVE EXISTING TREES AND ENTIRE ROOT SYSTEM IN ITS ENTIRETY, AS INDICATED. CONTRACTOR SHALL BE RESPONSIBLE FOR FILLING ANY AND ALL TREE STUMP HOLE AREAS TO EXISTING GRADE IN THE SURROUNDING AREA WITH COMPACTED FILL IN 12" LIFTS, COMPACTED TO 95% STANDARD PROCTOR DENSITY. CONTRACTOR SHALL BE RESPONSIBLE FOR REMOVAL AND DISPOSAL OF ANY AND ALL DEBRIS RELATED TO THIS ITEM.

DEMOLITION LEGEND

- DENOTES WETLANDS TO REMAIN
- DENOTES 0.05 ACRES OF WETLANDS TO BE FILLED.
- DENOTES EXISTING OVERGROWN GRAVEL DRIVEWAY
- DENOTES FENCING TO BE REMOVED
- DENOTES TREE TO BE REMOVED

N

0' 20' 40' 80'

GRAPHIC SCALE
1" = 40'

THE ORIGINAL SIGNED, DATED AND SEALED ENGINEERING PLANS ARE THE OFFICIAL DOCUMENTS SUBMITTED TO THE APPROVING AUTHORITY FOR THESE PLANS. CONTRACTOR / SUBCONTRACTOR / AND/OR OWNER SHALL CONSULT ENGINEER IMMEDIATELY IF DISCREPANCIES OCCUR. THE ORIGINAL SIGNED, DATED AND SEALED ENGINEERED PLAN SET SHALL OVERRIDE ANY OTHER PLANS, DETAILS, AND NOTES THAT APPEAR ON THIS SHEET ARE COPYRIGHTED BY MACHADO | PATANO, PLLC, AND CLAIM ALL RIGHTS OF THE COPYRIGHT LAWS.
YOUR PROJECT - OUR PRIORITY - NO EXCUSES
© COPYRIGHTED MATERIAL
OR APPROVED BY THE REGISTERED ENGINEER OF RECORD. IF DISCREPANCIES OCCUR, THE ORIGINAL SIGNED, DATED AND SEALED ENGINEERED PLAN SET SHALL OVERRIDE ANY OTHER PLANS.

MP DESIGN GROUP
MACHADO · PATANO · KILPATRICK · JONES
918 Howard Ave Suite F
Biloxi, Mississippi 39530
P: 228.388.1950
www.mpdesigngroup.us

ALABAMA LICENSED PROFESSIONAL ENGINEER
NO. 27668
GERROD W. KILPATRICK
3.27.26

OBA BAYSIDE GARAGES
24689 PELICAN PL.
ORANGE BEACH, AL 36561

SCALE:	AS INDICATED
PROJECT NO:	0001.25.012
DRAWN BY:	MBN
CHECKED BY:	GWK

EXISTING CONDITIONS AND SITE DEMOLITION PLAN

NO.	DATE	REVISION / SUBMITTAL
REV A	03.12.2026	CITY PERMITTING
REV B	03.27.2026	CITY PERMITTING

C100

VERIFY SCALES
BAR IS ONE INCH ON ORIGINAL DRAWING 1"
IF NOT ONE INCH ON THIS SHEET, ADJUST SCALES ACCORDINGLY

PRINTED: 3/27/2026 8:03 AM BY: Blake Noblin LAST SAVED: 3/27/2026 8:02 AM BY: Bnoblin
m:\0001_machado patano\2025 a&e jobs\0001.25.012_oba bayside\02-civil\03-production drawings\oba bayside garages-site.dwg

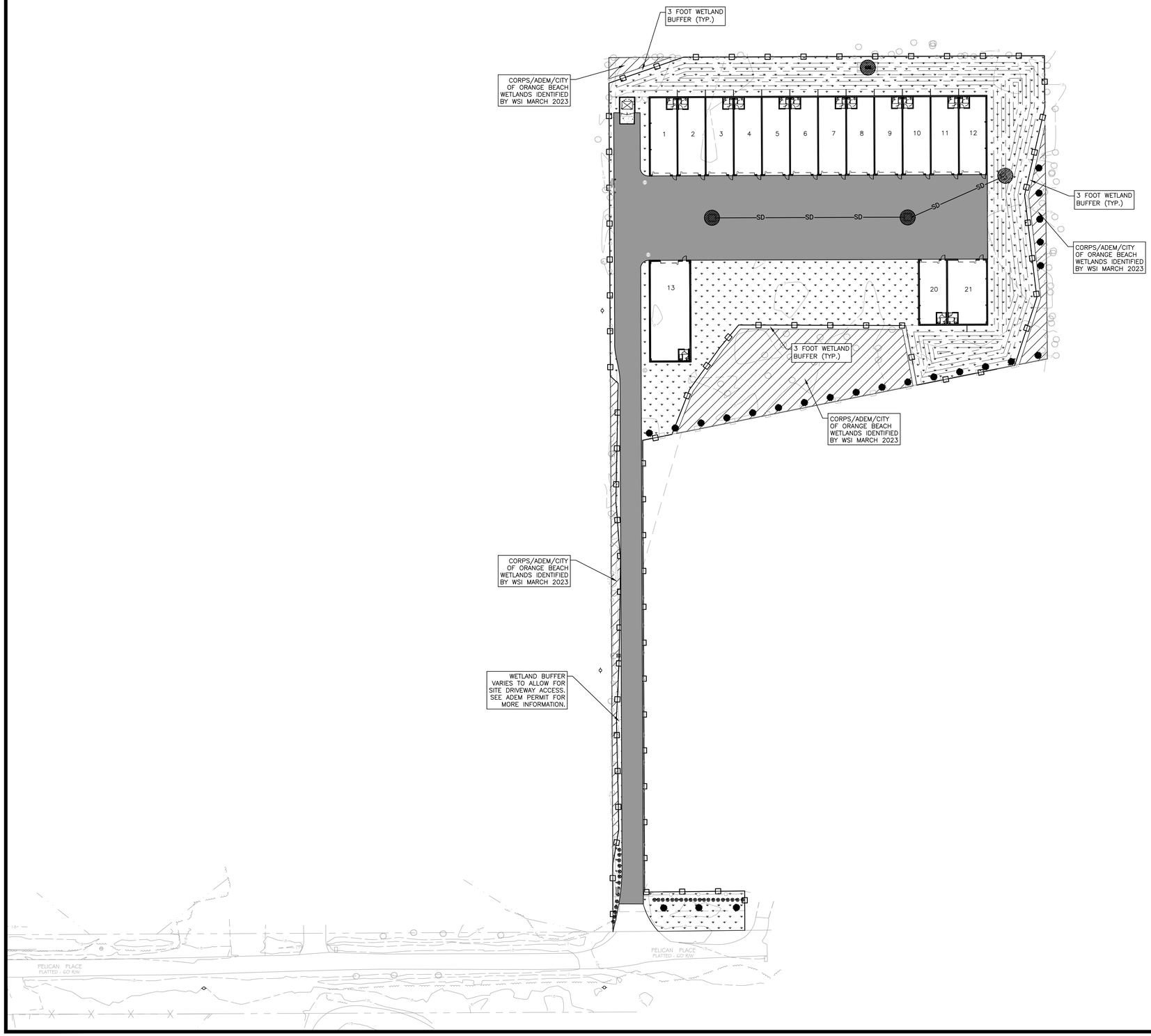

SWPPP LEGEND

- DENOTES PERIMETER CONTROL (SILT FENCE)
- DENOTES INLET PROTECTION

0' 20' 40' 80'

GRAPHIC SCALE
1" = 40'

THE ORIGINAL, SIGNED, DATED AND SEALED ENGINEERING PLANS ARE THE OFFICIAL DOCUMENTS SUBMITTED TO THE APPROVING AUTHORITY FOR THESE PLANS. CONTRACTOR / SUBCONTRACTOR / AND/OR OWNER SHALL CONSULT ENGINEERED PLANS TO VERIFY ANY CONDITIONS OR RESTRICTIONS THAT MAY HAVE BEEN REQUIRED BY THE APPROVING AUTHORITY OR APPROVED BY THE REGISTERED ENGINEER OF RECORD. IF DISCREPANCIES OCCUR, THE ORIGINAL, SIGNED, DATED AND SEALED ENGINEERED PLAN SET SHALL OVERRIDE ANY OTHER PLANS. THE DRAWINGS, DETAILS, AND NOTES THAT APPEAR ON THIS SHEET ARE COPYRIGHTED BY MACHADO | PATANO, PLLC, AND CLAIM ALL RIGHTS OF THE COPYRIGHT LAWS.
© COPYRIGHTED MATERIAL
YOUR PROJECT - OUR PRIORITY - NO EXCUSES

MP DESIGN GROUP
MACHADO · PATANO · KILPATRICK · JONES
918 Howard Ave Suite F
Biloxi, Mississippi 39530
P: 228.388.1950
www.mpdesigngroup.us

ALABAMA LICENSED PROFESSIONAL ENGINEER
NO. 27668
GERROD W. KILPATRICK
3-27-26

OBA BAYSIDE GARAGES
24689 PELICAN PL.
ORANGE BEACH, AL 36561

SCALE:	AS INDICATED
PROJECT NO:	0001.25.012
DRAWN BY:	MBN
CHECKED BY:	GWK

STORM WATER POLLUTION PREVENTION PLAN

NO.	DATE	REVISION / SUBMITTAL
REV A	03.12.2026	CITY PERMITTING
REV B	03.27.2026	CITY PERMITTING

C110

VERIFY SCALES
BAR IS ONE INCH ON ORIGINAL DRAWING
1"
IF NOT ONE INCH ON THIS SHEET, ADJUST SCALES ACCORDINGLY

PRINTED: 3/27/2026 8:04 AM BY: Blake Noblin LAST SAVED: 3/27/2026 8:02 AM BY: Bnoblin
m:\0001_machado patano\2025 a&e jobs\0001.25.012_oba bayside\02-civil\03-production drawings\oba bayside garages-site.dwg

CONTRACTOR NOTES

1. THE CONTRACTOR SHALL NOT PERFORM ANY WORK PERTAINING TO UNITS 13, 23, AND 24 UNTIL THE CONDITIONAL USE PERMIT HAS BEEN APPROVED BY THE CITY OF ORANGE BEACH. CONTRACTOR MUST HAVE APPROVED CONDITIONAL USE PERMIT ON SITE BEFORE COMMENCING ANY CIVIL SITE WORK PERTAINING TO THESE UNITS.
2. THIS PLAN SET IS FOR CIVIL SITE WORK ONLY. SCOPE IS RESTRICTED TO SITE PREPARATION, GRADING, UTILITIES, AND PAVING. NO VERTICAL CONSTRUCTION OR BUILDING TRADES SHALL COMMENCE UNDER THIS PERMIT BEYOND THE BUILDING PAD SUBGRADE.

CITY NOTES

1. PHASE 1 IS TO INCLUDE THE NORTH BUILDING (UNITS 1–12), CONDITIONAL USE PERMIT (CASE NO. 0502–CU–26) AND SOUTH BUILDING UNITS 13, 20, AND 21. PHASE 2 IS TO INCLUDE THE SOUTH BUILDING UNITS 14–19. ALL WORK TO THE SOUTH BUILDING UNITS IS CONTINGENT UPON CONDITIONAL USE APPROVAL (CASE NO. 0401–CU–26).
2. STORM WATER CALCULATIONS HAVE BEEN DESIGNED FOR PHASE 1. ADDITIONAL SITE PERMITTING SHALL BE REQUIRED BEFORE PHASE 2 SITE WORK CAN BEGIN.

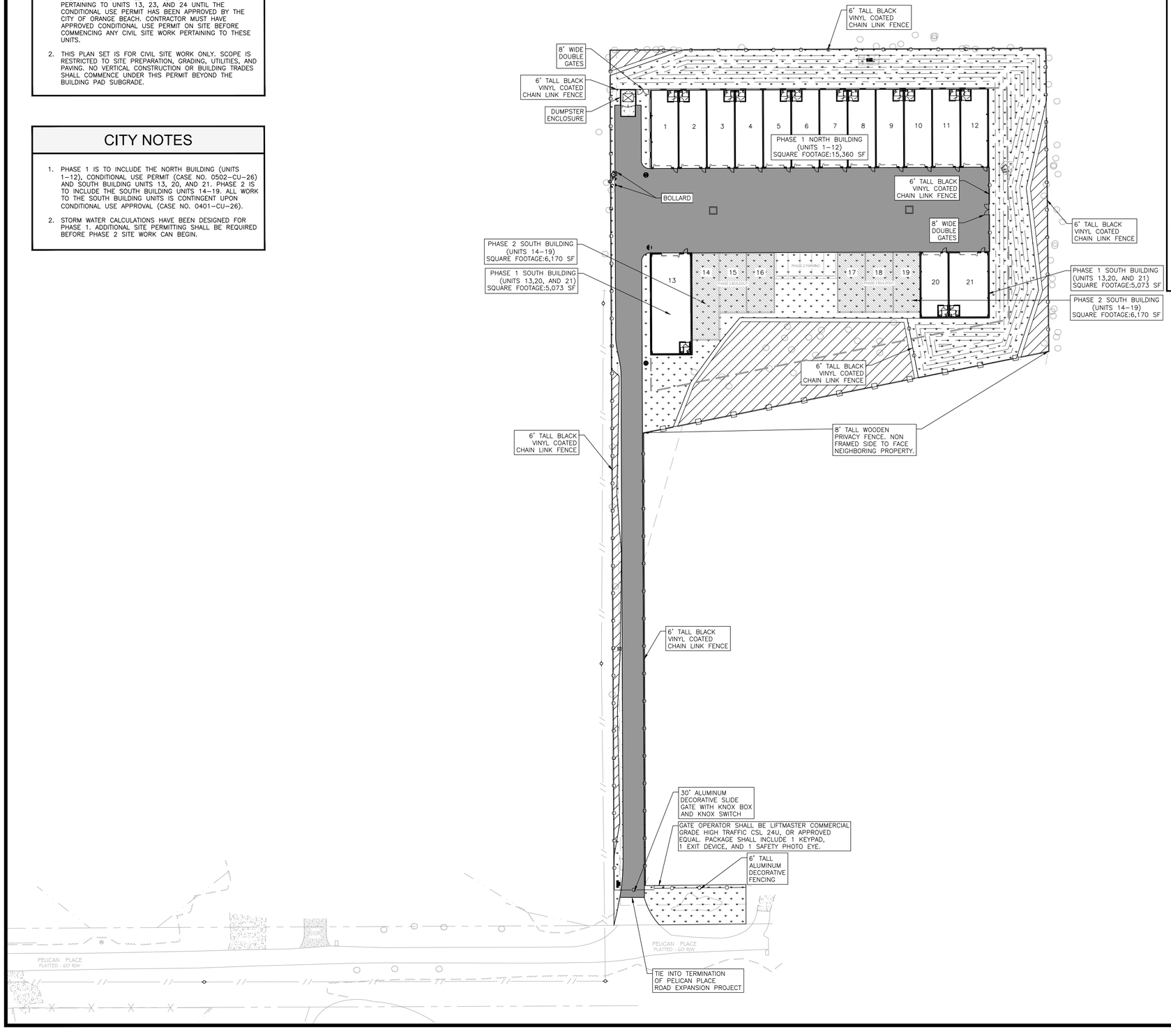

PAVEMENT LEGEND

- DENOTES ASPHALT PAVEMENT
- DENOTES HEAVY DUTY CONCRETE PAVEMENT
- DENOTES LANDSCAPING AREAS, SEE SHEET L100
- DENOTES WETLANDS TO REMAIN.
- DENOTES 6' TALL CHAIN LINK OR DECORATIVE ALUMINUM FENCE, SEE CALLOUTS
- DENOTES 8' TALL WOODEN PRIVACY FENCE
- DENOTES BUILDING SETBACK

SITE DATA TABLE

ZONING DISTRICT	GB
SITE ACREAGE (AC / SF)	±2.25 / ±98,010
FLOOD ZONE	X, NO. 015011, MAP NO. 01003C0961M, 04/19/2019
SETBACKS (FT)	FRONT:30, REAR:30, SIDE:10
BUFFER AREAS BETWEEN DISTRICTS (FT)	30
MINIMUM LOT AREA (SF)	20,000
MINIMUM LOT WIDTH AT BUILDING FRONT SETBACK (FT)	100
MAXIMUM BUILDING COVERAGE (%)	56
BUILDING SQUARE FOOTAGE PHASE 1 NORTH BUILDING (SF)	15,360
BUILDING SQUARE FOOTAGE PHASE 1 SOUTH BUILDING (SF)	5,073
BUILDING SQUARE FOOTAGE PHASE 2 SOUTH BUILDING (SF)	6,170
TOTAL PHASE 1 AND PHASE 2 BUILDING SQUARE FOOTAGE (SF)	26,603
IMPERVIOUS AREA (SF)	47,532
PERVIOUS AREA (SF)	50,478
UPLANDS (AC / SF)	1.91 / 83,199.6
WETLANDS (AC / SF)	0.34
WETLANDS TO REMAIN (AC /SF)	0.29 / 12,632.4
WETLANDS TO BE FILLED, SEE C100 (AC / SF)	0.05 / 2,178
PERCENTAGE OF LANDSCAPED UPLANDS (%)	57.13

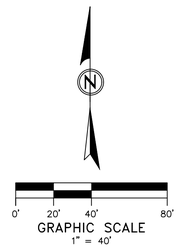

THE ORIGINAL SIGNED, DATED AND SEALED ENGINEERING PLANS ARE THE OFFICIAL DOCUMENTS SUBMITTED TO THE APPROVING AUTHORITY FOR THESE PLANS. CONTRACTOR / SUBCONTRACTOR / AND/OR OWNER SHALL CONSULT OR APPROVED BY THE REGISTERED ENGINEER OF RECORD. IF DISCREPANCIES OCCUR, THE ORIGINAL SIGNED, DATED AND SEALED ENGINEERED PLAN SET SHALL OVERRIDE ANY OTHER PLANS. THE DRAWINGS, DETAILS, AND NOTES THAT APPEAR ON THIS SHEET ARE COPYRIGHTED BY MACHADO | PATANO, PLLC, AND CLAIM ALL RIGHTS OF THE COPYRIGHT LAWS.
YOUR PROJECT - OUR PRIORITY - NO EXCUSES
© COPYRIGHTED MATERIAL

MP DESIGN GROUP
MACHADO · PATANO · KILPATRICK · JONES
918 Howard Ave Suite F
Biloxi, Mississippi 39530
P: 228.388.1950
www.mpdesigngroup.us

ALABAMA LICENSED PROFESSIONAL ENGINEER GERROD W. KILPATRICK NO. 27668 3-27-26

OBA BAYSIDE GARAGES
24689 PELICAN PL.
ORANGE BEACH, AL 36561

SCALE: AS INDICATED
PROJECT NO: 0001.25.012
DRAWN BY: MBN
CHECKED BY: GWK

CIVIL SITE PLAN

NO.	DATE	REVISION / SUBMITTAL
REV A	03.12.2026	CITY PERMITTING
REV B	03.27.2026	CITY PERMITTING

C200

VERIFY SCALES
BAR IS ONE INCH ON ORIGINAL DRAWING 1"
IF NOT ONE INCH ON THIS SHEET, ADJUST SCALES ACCORDINGLY

PRINTED: 3/27/2026 8:04 AM BY: Blake Noblin LAST SAVED: 3/27/2026 8:02 AM BY: Bnoblin
m:\0001_machado patano \2025 a&e jobs\0001.25.012_oba bayside\02-civil\03-production\03-production drawings\oba bayside garages-site.dwg

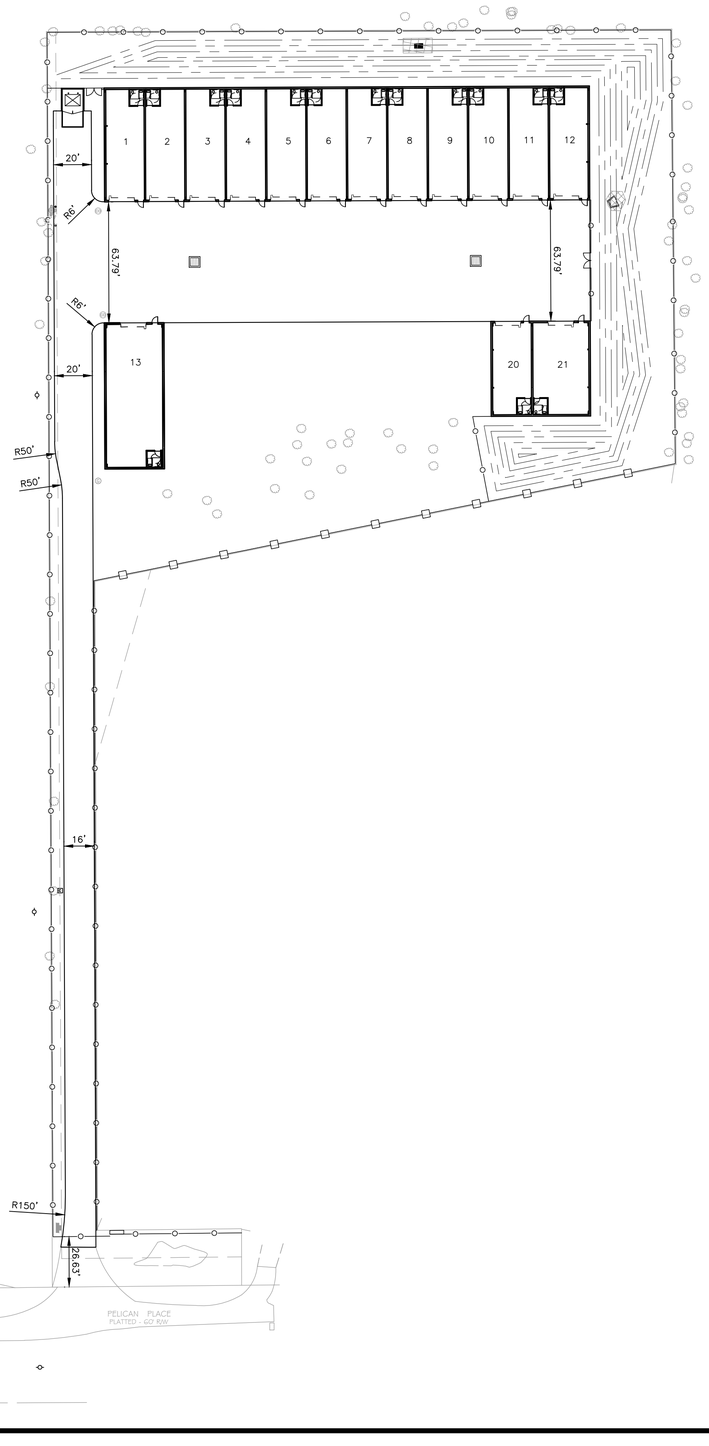

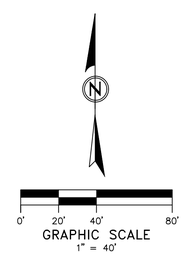

PRINTED: 3/27/2026 8:04 AM BY: Blake Noblin LAST SAVED: 3/27/2026 8:02 AM BY: Bnoblin
m:\0001_machado patano\2025 a&e jobs\0001.25.012_oba bayside\02-civil\03-production\03-production drawings\oba bayside garages-site.dwg

THE ORIGINAL SIGNED, DATED AND SEALED ENGINEERING PLANS ARE THE OFFICIAL DOCUMENTS SUBMITTED TO THE APPROVING AUTHORITY FOR THESE PLANS. CONTRACTOR / SUBCONTRACTOR / AND/OR OWNER SHALL CONSULT ENGINEERED PLANS TO VERIFY ANY CONDITIONS OR RESTRICTIONS THAT MAY HAVE BEEN REQUIRED BY THE APPROVING AUTHORITY OR APPROVED BY THE REGISTERED ENGINEER OF RECORD. IF DISCREPANCIES OCCUR, THE ORIGINAL SIGNED, DATED AND SEALED ENGINEERED PLAN SET SHALL OVERRIDE ANY OTHER PLANS. THE DRAWINGS, DETAILS, AND NOTES THAT APPEAR ON THIS SHEET ARE COPYRIGHTED BY MACHADO | PATANO, PLLC, AND OJAM ALL RIGHTS OF THE COPYRIGHT LAWS.
YOUR PROJECT - OUR PRIORITY - NO EXCUSES
© COPYRIGHTED MATERIAL

MP DESIGN GROUP
MACHADO · PATANO · KILPATRICK · JONES
918 Howard Ave Suite F
Biloxi, Mississippi 39530
P: 228.388.1950
www.mpdesigngroup.us

ALABAMA LICENSED PROFESSIONAL ENGINEER
NO. 27668
GERROD W. KILPATRICK
3-27-26

OBA BAYSIDE GARAGES

24689 PELICAN PL.
ORANGE BEACH, AL 36561

SCALE:	AS INDICATED
PROJECT NO:	0001.25.012
DRAWN BY:	MBN
CHECKED BY:	GWK

SITE LAYOUT PLAN

NO.	DATE	REVISION / SUBMITTAL
REV A	03.12.2026	CITY PERMITTING
REV B	03.27.2026	CITY PERMITTING

C210

VERIFY SCALES
BAR IS ONE INCH ON ORIGINAL DRAWING
1"
IF NOT ONE INCH ON THIS SHEET, ADJUST SCALES ACCORDINGLY

PRINTED: 3/27/2026 8:04 AM BY: Blake Noblin LAST SAVED: 3/27/2026 8:02 AM BY: Bnoblin
m:\0001_machado patano\2025 o&e jobs\0001.25.012_oba bayside\02-civil\03-production\03-production drawings\oba bayside garages-site.dwg

GRADING LEGEND

- 1185.50 — DENOTES PROPOSED SPOT ELEVATIONS
- 30 — DENOTES EXISTING GRADE CONTOUR
- 30 — DENOTES FINISHED GRADE CONTOUR
- 3.50% — DENOTES WATERSHED FLOW DIRECTION

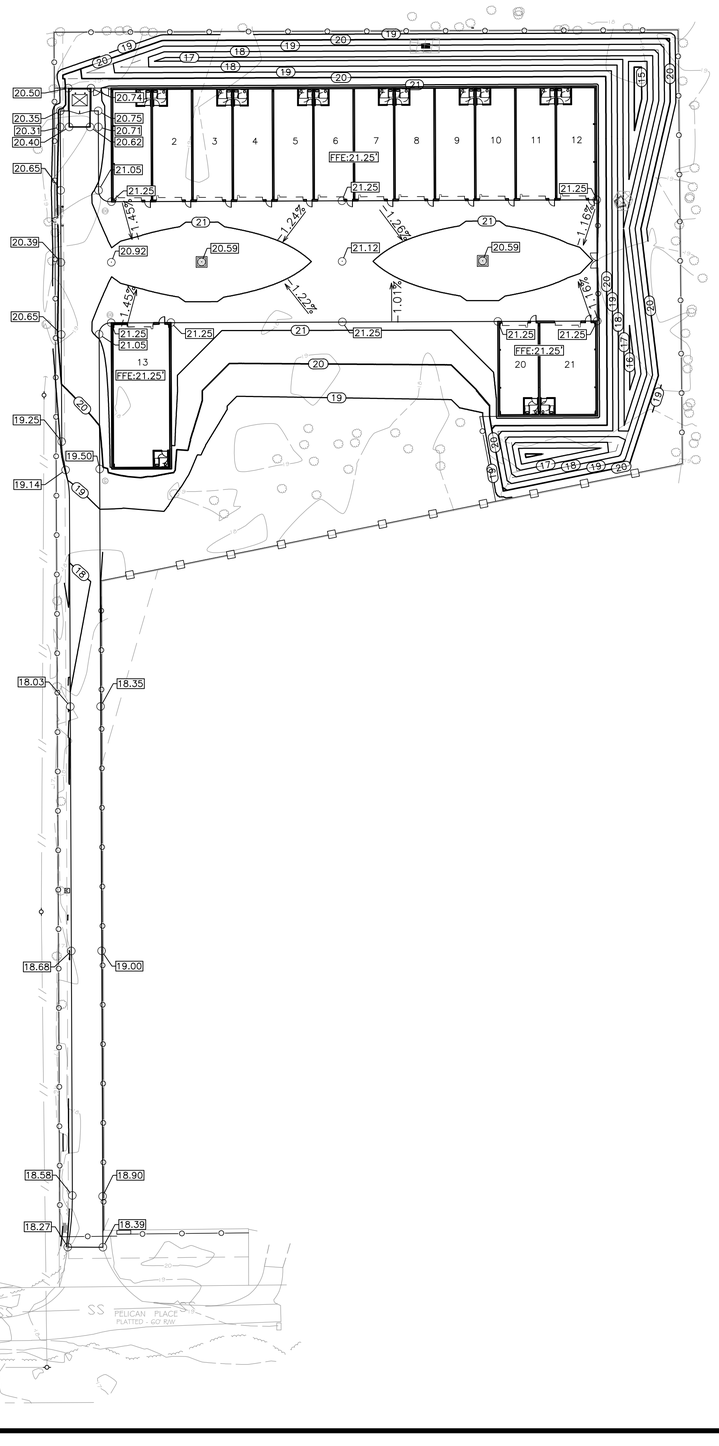

N

0' 20' 40' 80'

GRAPHIC SCALE
1" = 40'

THE ORIGINAL SIGNED, DATED AND SEALED ENGINEERING PLANS ARE THE OFFICIAL DOCUMENTS SUBMITTED TO THE APPROVING AUTHORITY FOR THESE PLANS. CONTRACTOR / SUBCONTRACTOR / AND/OR OWNER SHALL CONSULT ENGINEERED PLANS TO VERIFY ANY CONDITIONS OR RESTRICTIONS THAT MAY HAVE BEEN REQUIRED BY THE APPROVING AUTHORITY OR APPROVED BY THE REGISTERED ENGINEER OF RECORD. IF DISCREPANCIES OCCUR, THE ORIGINAL SIGNED, DATED AND SEALED ENGINEERED PLAN SET SHALL OVERRIDE ANY OTHER PLANS. THE DRAWINGS, DETAILS, AND NOTES THAT APPEAR ON THIS SHEET ARE COPYRIGHTED BY MACHADO | PATANO, PLLC, AND OJAM ALL RIGHTS OF THE COPYRIGHT LAWS.
YOUR PROJECT - OUR PRIORITY - NO EXCUSES
© COPYRIGHTED MATERIAL

MP DESIGN GROUP
MACHADO · PATANO · KILPATRICK · JONES
918 Howard Ave Suite F
Biloxi, Mississippi 39530
P: 228.388.1950
www.mpdesigngroup.us

ALABAMA LICENSED PROFESSIONAL ENGINEER
NO. 27668
GERROD W. KILPATRICK
3.27.26

OBA BAYSIDE GARAGES

24689 PELICAN PL.
ORANGE BEACH, AL 36561

SCALE: AS INDICATED
PROJECT NO: 0001.25.012
DRAWN BY: MBN
CHECKED BY: GWK

SITE GRADING PLAN

NO.	DATE	REVISION / SUBMITTAL
REV A	03.12.2026	CITY PERMITTING
REV B	03.27.2026	CITY PERMITTING

C300

VERIFY SCALES
BAR IS ONE INCH ON ORIGINAL DRAWING
1"
IF NOT ONE INCH ON THIS SHEET, ADJUST SCALES ACCORDINGLY

100 - YEAR STORM EVENT DRAINAGE FLOWS

PRE DEVELOPMENT DRAINAGE FLOWS

DRAINAGE AREA	TOTAL AREA (ACRES)	TOTAL AREA (SQ.FT.)	RUNOFF COEFFICIENT [WOODED] (CN)	OVERGROWN DRIVEWAY (SQ.FT.)	RUNOFF COEFFICIENT [PERVIOUS] (CN)	PERVIOUS AREA (SQ.FT.)	RUNOFF COEFFICIENT [WEIGHTED] (CN)	TIME OF CONCENTRATION (TC)	Q (CFS)
EXISTING SITE	2.25	98,010	98	19,607	39	78,403	51	5 MINUTES	35.44

POST DEVELOPMENT DRAINAGE FLOWS

DRAINAGE AREA	TOTAL AREA (ACRES)	TOTAL AREA (SQ.FT.)	RUNOFF COEFFICIENT [IMPERVIOUS] (CN)	IMPERVIOUS AREA (SQ.FT.)	RUNOFF COEFFICIENT [PERVIOUS] (CN)	PERVIOUS AREA (SQ.FT.)	RUNOFF COEFFICIENT [WEIGHTED] (CN)	TIME OF CONCENTRATION (TC)	Q (CFS)
SWMA 1	1.15	50,019	98	35,047	39	14,972	80	5 MINUTES	25.30
UNDETAINED	1.10	47,991	98	12,755	39	35,236	55	5 MINUTES	18.79

SWMA #1 DATA

POST DRAINAGE FLOWS ROUTED THROUGH DETENTION POND	
CRITICAL STORM DESIGN	100 YEAR STORM
PEAK ELEVATION	19.82'
PEAK DISCHARGE (CFS)	15.78 CFS
TOP OF DETENTION POND	ELEVATION 15.00'
BOTTOM OF DETENTION POND	ELEVATION 20.00'

TOTAL POST DEVELOPED DRAINAGE

CRITICAL STORM DESIGN	100 YEAR STORM
PEAK DISCHARGE (CFS)	34.57 CFS

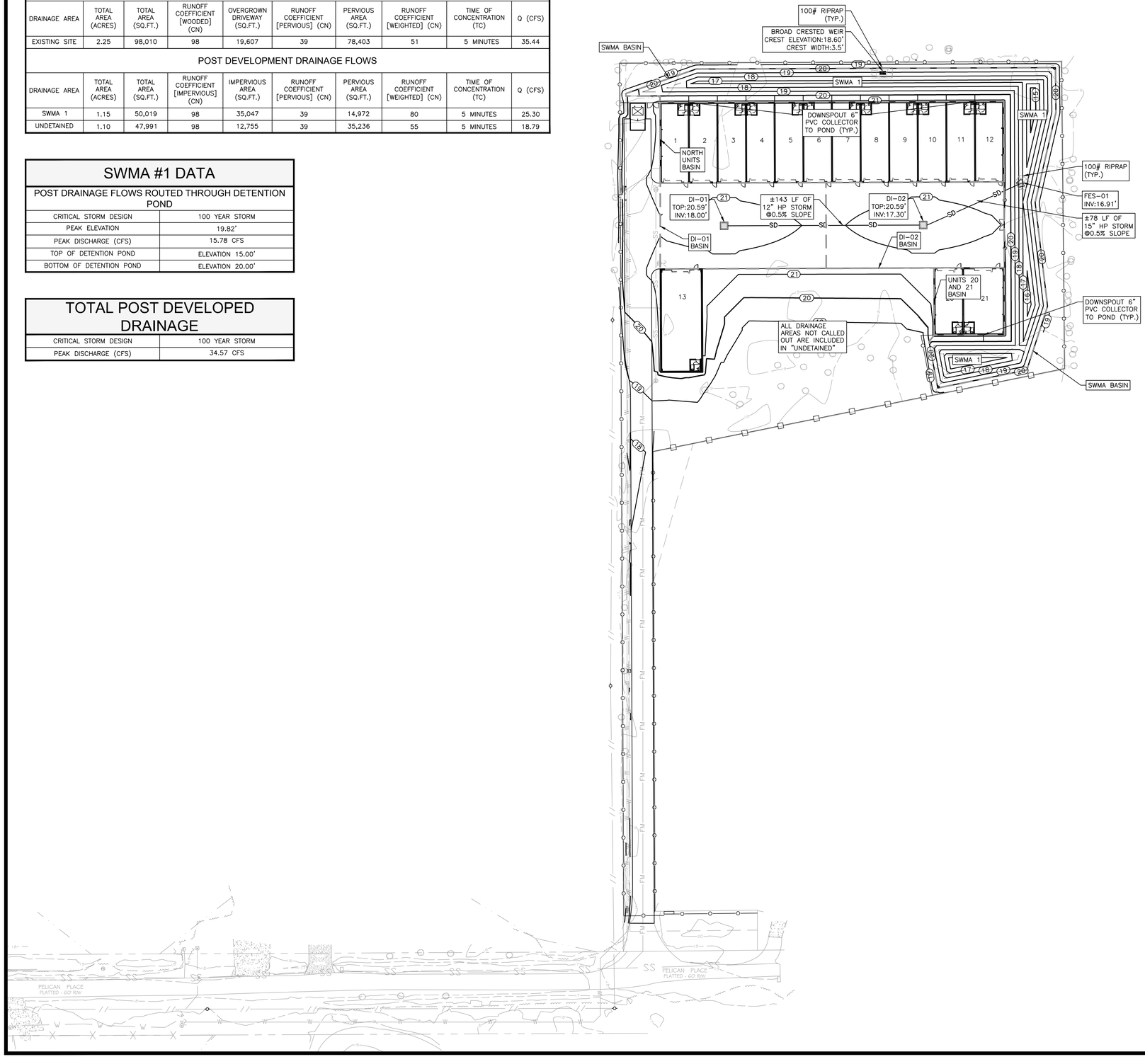

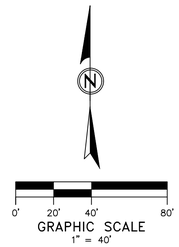

THE ORIGINAL SIGNED, DATED AND SEALED ENGINEERING PLANS ARE THE OFFICIAL DOCUMENTS SUBMITTED TO THE APPROVING AUTHORITY FOR THESE PLANS. CONTRACTOR / SUBCONTRACTOR / AND/OR OWNER SHALL CONSULT ENGINEERED PLANS TO VERIFY ANY CONDITIONS OR RESTRICTIONS THAT MAY HAVE BEEN REQUIRED BY THE APPROVING AUTHORITY OR APPROVED BY THE REGISTERED ENGINEER OF RECORD. IF DISCREPANCIES OCCUR, THE ORIGINAL SIGNED, DATED AND SEALED ENGINEERED PLAN SET SHALL OVERRIDE ANY OTHER PLANS. THE DRAWINGS, DETAILS, AND NOTES THAT APPEAR ON THIS SHEET ARE COPYRIGHTED BY MACHADO | PATANO, PLLC, AND OJAM ALL RIGHTS OF THE COPYRIGHT LAWS.
YOUR PROJECT - OUR PRIORITY - NO EXCUSES
© COPYRIGHTED MATERIAL

MP DESIGN GROUP
MACHADO · PATANO · KILPATRICK · JONES
918 Howard Ave Suite F
Biloxi, Mississippi 39530
P: 228.388.1950
www.mpdesigngroup.us

ALABAMA LICENSED PROFESSIONAL ENGINEER GERROD W. KILPATRICK NO. 27668 3-27-26

OBA BAYSIDE GARAGES

24689 PELICAN PL.
ORANGE BEACH, AL 36561

SCALE: AS INDICATED
PROJECT NO: 0001.25.012
DRAWN BY: MBN
CHECKED BY: GWK

SITE DRAINAGE PLAN

NO.	DATE	REVISION / SUBMITTAL
REV A	03.12.2026	CITY PERMITTING
REV B	03.27.2026	CITY PERMITTING

C310

VERIFY SCALES
BAR IS ONE INCH ON ORIGINAL DRAWING
1"
IF NOT ONE INCH ON THIS SHEET, ADJUST SCALES ACCORDINGLY

PRINTED: 3/27/2026 8:04 AM BY: Blake Noblin LAST SAVED: 3/27/2026 8:02 AM BY: Bnoblin
m:\0001_machado patano\2025 o&e jobs\0001.25.012_oba bayside\02-civil\03-production\03-production drawings\oba bayside garages-site.dwg

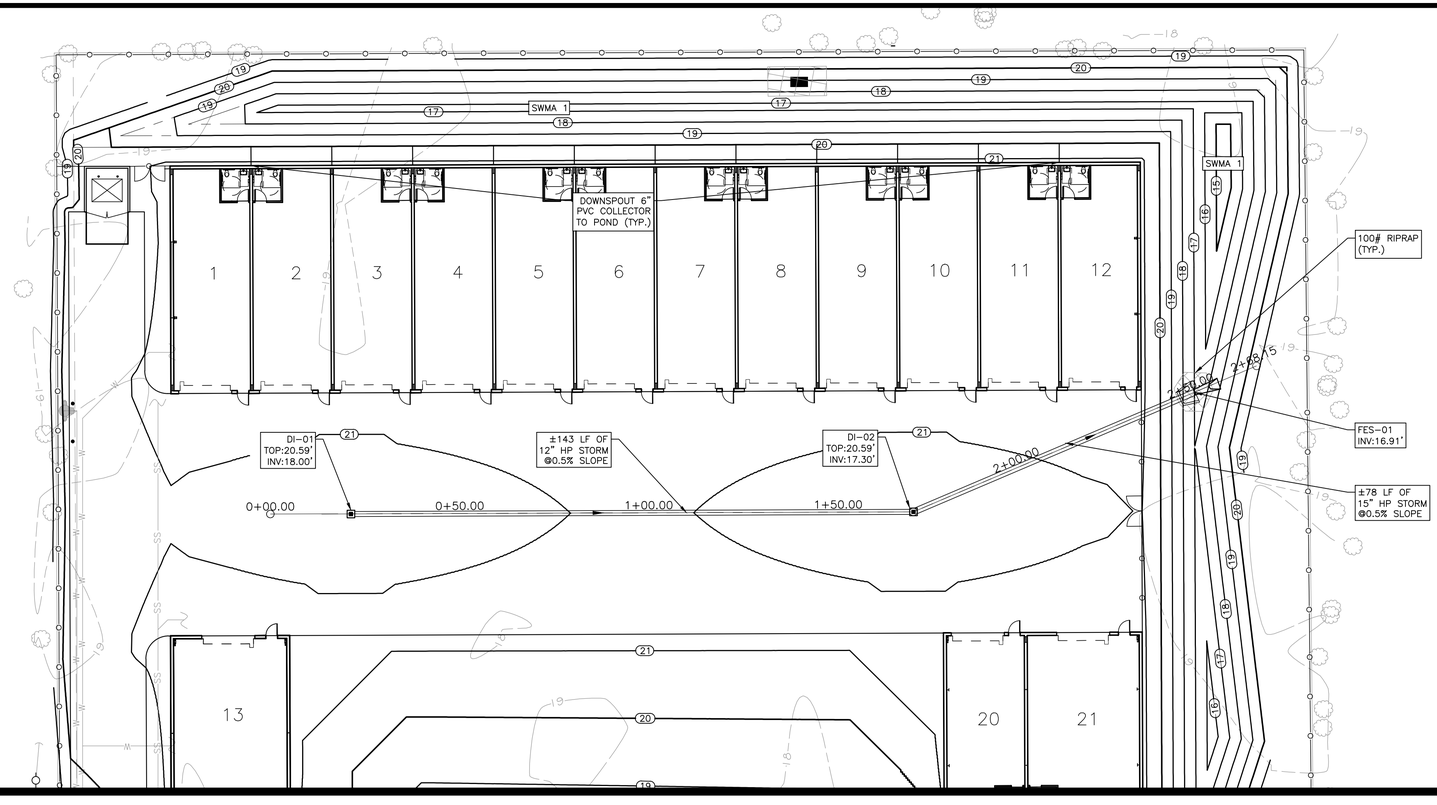

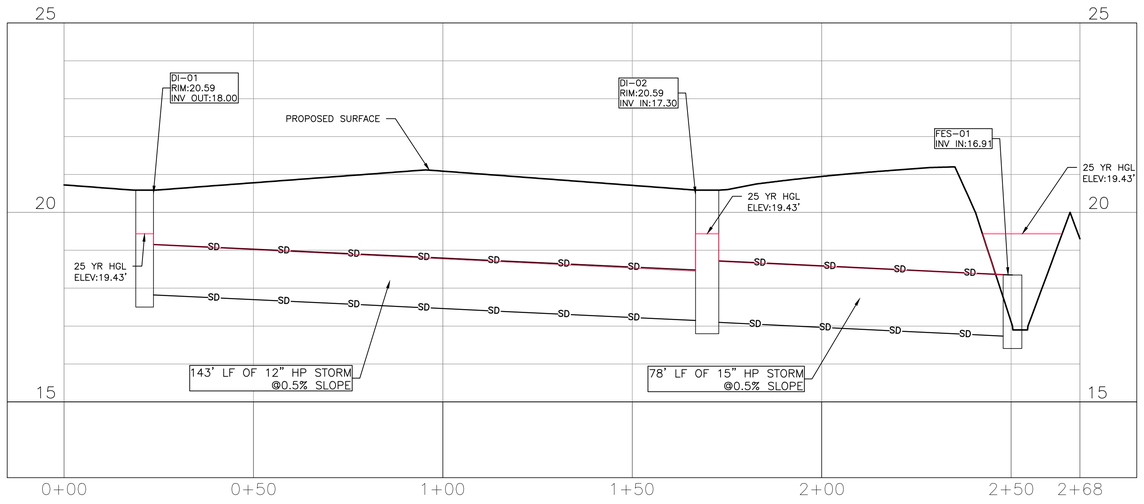

PROFILE SCALE:
VERTICAL: 1"=1'
HORIZONTAL: 1"=20'

THE ORIGINAL SIGNED, DATED AND SEALED ENGINEERING PLANS ARE THE OFFICIAL DOCUMENTS SUBMITTED TO THE APPROVING AUTHORITY FOR THESE PLANS. CONTRACTOR / SUBCONTRACTOR / AND/OR OWNER SHALL CONSULT ENGINEERED PLANS TO VERIFY ANY CONDITIONS OR RESTRICTIONS THAT MAY HAVE BEEN REQUIRED BY THE APPROVING AUTHORITY OR APPROVED BY THE REGISTERED ENGINEER OF RECORD. IF DISCREPANCIES OCCUR, THE ORIGINAL SIGNED, DATED AND SEALED ENGINEERED PLAN SET SHALL OVERRIDE ANY OTHER PLANS. THE DRAWINGS, DETAILS, AND NOTES THAT APPEAR ON THIS SHEET ARE COPYRIGHTED BY MACHADO | PATANO, PLLC, AND OJAM ALL RIGHTS OF THE COPYRIGHT LAWS.
YOUR PROJECT - OUR PRIORITY - NO EXCUSES
© COPYRIGHTED MATERIAL

MP DESIGN GROUP
MACHADO · PATANO · KILPATRICK · JONES
918 Howard Ave Suite F
Biloxi, Mississippi 39530
P: 228.388.1950
www.mpdesigngroup.us

ALABAMA LICENSED PROFESSIONAL ENGINEER
NO. 27668
GERROD W. KILPATRICK
3-27-26

OBA BAYSIDE GARAGES
24689 PELICAN PL.
ORANGE BEACH, AL 36561

SCALE: AS INDICATED
PROJECT NO: 0001.25.012
DRAWN BY: MBN
CHECKED BY: GWK

SITE DRAINAGE PLAN AND PROFILE

NO.	DATE	REVISION / SUBMITTAL
REV A	03.12.2026	CITY PERMITTING
REV B	03.27.2026	CITY PERMITTING

C311

VERIFY SCALES
BAR IS ONE INCH ON ORIGINAL DRAWING
1"
IF NOT ONE INCH ON THIS SHEET, ADJUST SCALES ACCORDINGLY

PRINTED: 3/27/2026 8:11 AM BY: Blake Noblin LAST SAVED: 3/27/2026 7:52 AM BY: Bnoblin
m:\0001_machado patano\2025 a&e jobs\0001.25.012_oba bayside\02-civil\03-production\03-production drawings\oba bayside garages-drainage.dwg

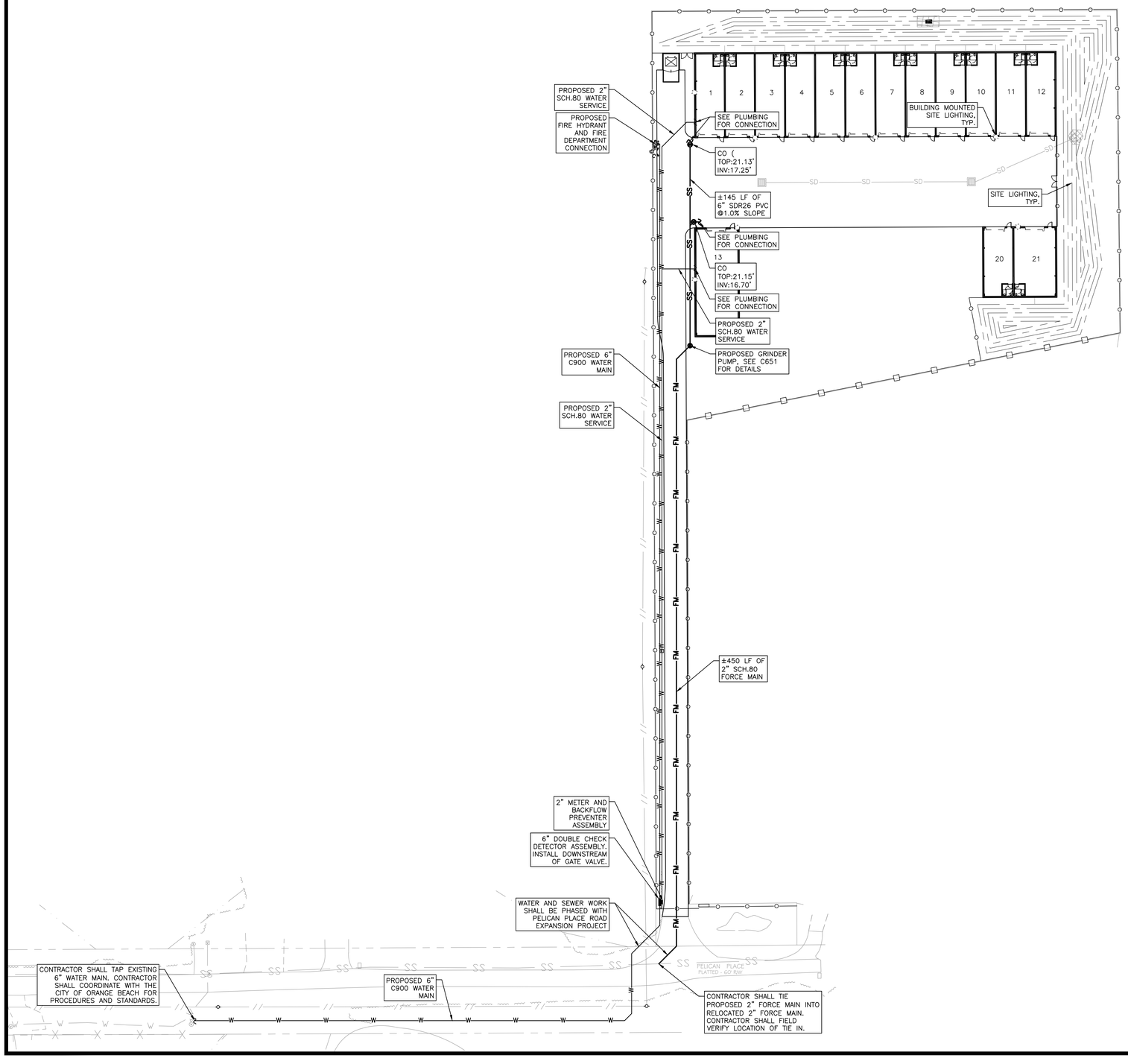

UTILITY PROVIDERS

ELECTRICITY:

BALDWIN EMC
SUMMERDALE, AL. 32580
251-989-6247

WATER, SEWER, AND FIRE:

ORANGE BEACH WATER, SEWER, AND FIRE AUTHORITY
ORANGE BEACH, AL. 36561
251-981-4233

ORANGE BEACH WATER RECLAMATION
ORANGE BEACH, AL. 36561
251-974-5681

TELEPHONE:

CENTURYLINK
FOLEY, AL. 36535
251-952-0008

N

0' 20' 40' 80'
GRAPHIC SCALE
1" = 40'

YOUR PROJECT - OUR PRIORITY - NO EXCUSES
© COPYRIGHTED MATERIAL
THE ORIGINAL SIGNED, DATED AND SEALED ENGINEERING PLANS ARE THE OFFICIAL DOCUMENTS SUBMITTED TO THE APPROVING AUTHORITY FOR THESE PLANS. CONTRACTOR / SUBCONTRACTOR / AND/OR OWNER SHALL CONSULT ENGINEER OF RECORD IF DISCREPANCIES OCCUR. THE ORIGINAL SIGNED, DATED AND SEALED ENGINEERED PLAN SET SHALL OVERRIDE ANY OTHER PLANS. THE DRAWINGS, DETAILS, AND NOTES THAT APPEAR ON THIS SHEET ARE COPYRIGHTED BY MACHADO | PATANO, PLLC, AND OJAM ALL RIGHTS OF THE COPYRIGHT LAWS.
THE ORIGINAL SIGNED, DATED AND SEALED ENGINEERING PLANS ARE THE OFFICIAL DOCUMENTS SUBMITTED TO THE APPROVING AUTHORITY FOR THESE PLANS. CONTRACTOR / SUBCONTRACTOR / AND/OR OWNER SHALL CONSULT ENGINEER OF RECORD IF DISCREPANCIES OCCUR. THE ORIGINAL SIGNED, DATED AND SEALED ENGINEERED PLAN SET SHALL OVERRIDE ANY OTHER PLANS. THE DRAWINGS, DETAILS, AND NOTES THAT APPEAR ON THIS SHEET ARE COPYRIGHTED BY THE REGISTERED ENGINEER OF RECORD. IF DISCREPANCIES OCCUR, THE ORIGINAL SIGNED, DATED AND SEALED ENGINEERED PLAN SET SHALL OVERRIDE ANY OTHER PLANS. THE DRAWINGS, DETAILS, AND NOTES THAT APPEAR ON THIS SHEET ARE COPYRIGHTED BY MACHADO | PATANO, PLLC, AND OJAM ALL RIGHTS OF THE COPYRIGHT LAWS.
OR APPROVED BY THE REGISTERED ENGINEER OF RECORD. IF DISCREPANCIES OCCUR, THE ORIGINAL SIGNED, DATED AND SEALED ENGINEERED PLAN SET SHALL OVERRIDE ANY OTHER PLANS. THE DRAWINGS, DETAILS, AND NOTES THAT APPEAR ON THIS SHEET ARE COPYRIGHTED BY MACHADO | PATANO, PLLC, AND OJAM ALL RIGHTS OF THE COPYRIGHT LAWS.

MP DESIGN GROUP
MACHADO · PATANO · KILPATRICK · JONES
918 Howard Ave Suite F
Biloxi, Mississippi 39530
P: 228.388.1950
www.mpdesigngroup.us

ALABAMA LICENSED PROFESSIONAL ENGINEER NO. 27668 GERROD W. KILPATRICK 3.27.26

OBA BAYSIDE GARAGES
24689 PELICAN PL.
ORANGE BEACH, AL 36561

SCALE: AS INDICATED
PROJECT NO: 0001.25.012
DRAWN BY: MBN
CHECKED BY: GWK

SITE UTILITY PLAN

NO.	DATE	REVISION / SUBMITTAL
REV A	03.12.2026	CITY PERMITTING
REV B	03.27.2026	CITY PERMITTING

C400

VERIFY SCALES
BAR IS ONE INCH ON ORIGINAL DRAWING
1"
IF NOT ONE INCH ON THIS SHEET, ADJUST SCALES ACCORDINGLY

PRINTED: 3/27/2026 8:04 AM BY: Blake Noblin LAST SAVED: 3/27/2026 8:02 AM BY: Bnoblin
m:\0001_machado patano\2025 o&e jobs\0001.25.012_oba bayside\02-civil\03-production\03-production drawings\oba bayside garages-site.dwg

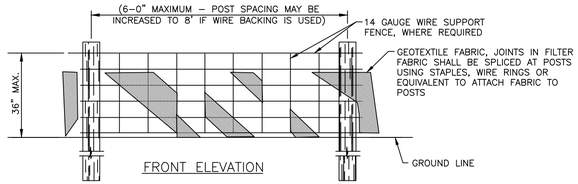

FRONT ELEVATION

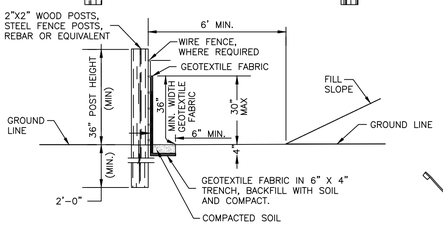

SIDE ELEVATION

SILT FENCE OPTION

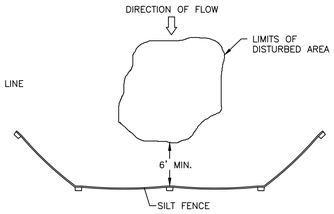

PLAN VIEW

STRAW ROLL INSTALLATION REQUIRES THE PLACEMENT AND SECURE STAKING OF THE ROLL IN A 3" MINIMUM TRENCH DUG ON CONTOUR. RUNOFF MUST NOT BE ALLOWED TO RUN UNDER OR AROUND ROLL.

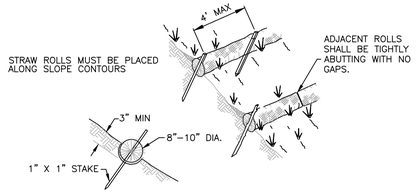

STRAW ROLL WATTLE OPTION

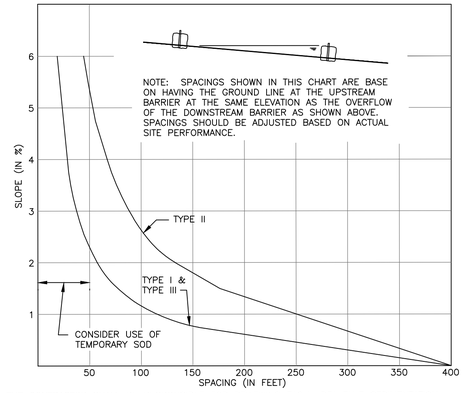

THE CONTRACTOR SHALL BE RESPONSIBLE FOR REVIEWING EACH AREA THAT SEDIMENTATION BARRIERS ARE REQUIRED AND DETERMINING IF, BASED ON THE ABOVE CHART, ADDITIONAL ROWS OF SEDIMENTATION BARRIERS ARE REQUIRED. THE STORMWATER POLLUTION PREVENTION PLAN IS ONLY A SCHEMATIC DRAWING OF THE BASIC REQUIREMENTS FOR A BEST MANAGEMENT PRACTICES PLAN. THE CONTRACTOR SHALL BE RESPONSIBLE FOR DETERMINING ANY ADDITIONAL REQUIREMENTS FOR IMPLEMENTATION OF THIS PLAN.

CHART 1 (SPACING FOR SEDIMENT BARRIERS

PERIMETER CONTROL NOTES

1. FILTER FABRIC FENCES SHALL BE INSTALLED ALONG CONTOUR WHENEVER POSSIBLE.
1. POSTS SHALL BE SPACED A MAXIMUM OF 6' O.C, SPACING MAY BE INCREASED TO 8' IF WIRE BACKING IS USED.
2. POSTS SHALL BE A MINIMUM OF 5'-0" IN LENGTH. IN ADDITION POSTS SHALL BE EITHER 2" x 2" N.D. WOOD POST OR HEAVY DUTY STEEL T-POSTS WITH PROJECTIONS FOR WIRE FASTENING.
3. WIRE SUPPORT FENCE SHALL BE A MINIMUM OF 36" IN HEIGHT, SHALL NOT EXTEND MORE THAN 36" ABOVE THE GROUND, AND SHALL EXTEND 2" INTO THE TRENCH.
4. WIRE FENCE SHALL BE A MINIMUM OF 14 GAUGE AND SHALL HAVE A MAXIMUM MESH SPACING OF 6". WIRE SHALL BE SECURELY FASTENED TO THE UPSLOPE, PROJECT SIDE OF POSTS USING HEAVY DUTY STAPLES (AT LEAST 1" LONG), TIE WIRES OR HOG RINGS.
5. GEOTEXTILE FABRIC SHALL BE A MINIMUM OF 36" IN HEIGHT, AND SHALL NOT EXTEND MORE THAN 36" ABOVE THE ORIGINAL GROUND SURFACE.
6. FABRIC SHALL BE STAPLED OR WIRED TO THE FENCE AT THE TOP, MIDDLE, AND BOTTOM OF EACH POST. IN ADDITION THE FABRIC SHALL BE STAPLED OR WIRED TO THE WIRE FENCE APPROXIMATELY ONE HALF (1/2) THE DISTANCE BETWEEN THE POSTS AT THE TOP, MIDDLE AND BOTTOM OF THE WIRE FENCE.
7. GEOTEXTILE FABRIC SHALL BE SPLICED TOGETHER ONLY AT A SUPPORT POST, WITH A MINIMUM OF 3' OVERLAP. EACH FREE END OF THE FABRIC SHALL BE SECURELY TIED TO THE WIRE FENCE AT 6" O.C. VERTICALLY.
8. SILT FENCES SHALL BE MAINTAINED FOR THE DURATION OF THE PROJECT. THE ENTIRE LENGTH OF FENCE SHALL BE CHECKED FOR ANY DAMAGES ON A DAILY BASIS AND BEFORE AND AFTER ANY RAINFALL EVENT, FOR ANY DAMAGES. ANY DAMAGES FOUND SHALL BE REMEDIATED BEFORE THE DAY'S END AT NO ADDITIONAL COST TO THE OWNER.
9. SILT FENCES SHALL BE MAINTAINED TO PREVENT ANY MATERIAL FROM MIGRATING FROM THE UPSLOPE SIDE OF THE FENCE. ANY REQUIRED MAINTENANCE OF THE SILT FENCE SHALL BE THE RESPONSIBILITY OF THE CONTRACTOR.
10. SEDIMENT DEPOSITS SHALL BE REMOVED AFTER EACH RAINFALL EVENT AND WHEN DEPOSITS REACH APPROXIMATELY ONE-HALF (1/2) THE HEIGHT OF THE FENCE.
11. IN ORDER TO PREVENT SEDIMENT LADEN STORM WATER FROM BY-PASSING THE FENCE, IN AREAS WHERE SILT FENCES ARE NOT UTILIZED ON ALL SIDES OF A DISTURBED AREA, THE FENCE SHALL EXTEND BEYOND THE DISTURBED AREA IN J-HOOK SHAPE ON EACH END AS SHOWN IN THE ISOLATED SILT FENCE INSTALLATION PLAN VIEW.

1 PERIMETER CONTROL DETAILS

NOT TO SCALE

CONSTRUCTION ENTRANCE/EXIT NOTE

2. THE ENTRANCE SHALL BE PROPERLY MAINTAINED FOR THE DURATION OF THE PROJECT TO PREVENT THE TRACKING OF SEDIMENT ONTO PUBLIC RIGHT-OF-WAY. ALL MAINTENANCE AND REPAIRS SHALL BE THE RESPONSIBILITY OF THE CONTRACTOR.
3. THE ENTRANCE SHALL BE CHECKED ON A DAILY BASIS AND BEFORE AND AFTER ANY RAINFALL EVENT FOR ANY DAMAGES. ANY DAMAGES FOUND SHALL BE REMEDIATED BEFORE THE DAYS END AT NO ADDITIONAL COST TO THE OWNER.
4. THE ENTRANCE SHALL BE PROPERLY GRADED TO PREVENT THE FLOW OF SEDIMENT ONTO PUBLIC RIGHT-OF-WAY. ALL MATERIALS SPILLED, DROPPED, WASHED OR TRACKED FROM VEHICLES ONTO ROADWAYS OR INTO STORM DRAINS SHALL BE REMOVED IMMEDIATELY.
5. MEASURES SHALL BE TAKEN TO PREVENT VEHICULAR TRAFFIC FROM BYPASSING THE CONSTRUCTION ENTRANCE DURING INGRESS AND EGRESS.

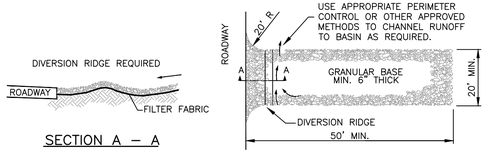

SECTION A - A

PLAN

2 CONSTRUCTION ENTRANCE/EXIT DETAIL

NOT TO SCALE

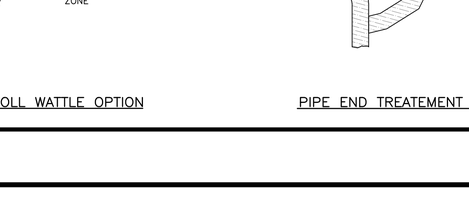

POINT A MUST BE HIGHER THAN POINT B TO DIRECT WATER FLOW OVER THE DIKE BUT NOT AROUND THE ENDS OF THE DIKE

CROSS SECTION

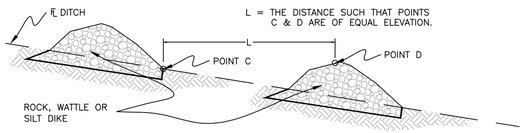

PROFILE

PROFILE VIEW ALONG DITCH FLOWLINE

PLAN

3 CHECK DAM PLACEMENT DETAIL

NOT TO SCALE

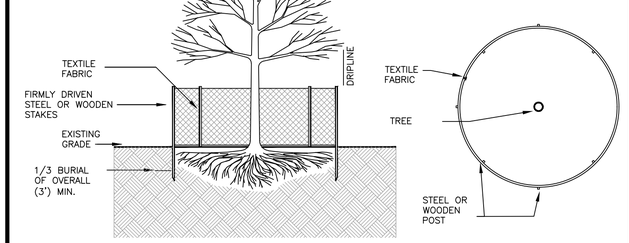

SECTION PLAN

4 TREE PROTECTION PLACEMENT DETAIL

NOT TO SCALE

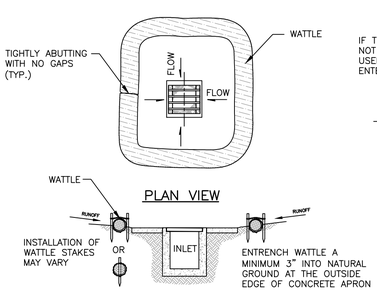

PLAN VIEW

PROFILE

INLET STRAW ROLL WATTLE OPTION

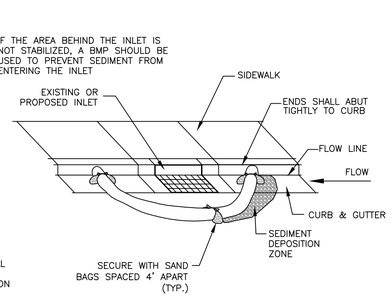

CURB INLET STRAW ROLL WATTLE OPTION

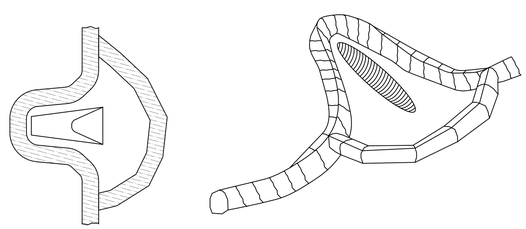

PIPE END TREATEMENT WATTLE OPTION

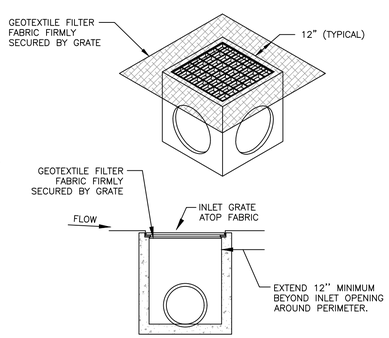

GEOTEXTILE FILTER FABRIC OPTION

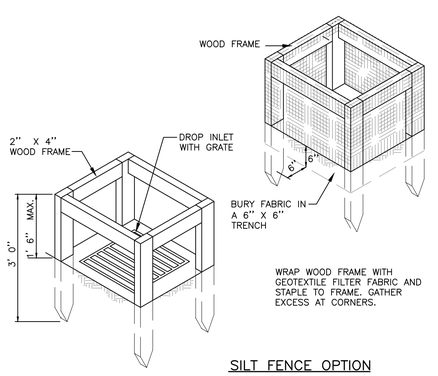

SILT FENCE OPTION

5 TYPICAL INLET PROTECTION DETAILS

NOT TO SCALE

PRINTED: 3/27/2026 8:05 AM BY: Blake Noblin LAST SAVED: 3/27/2026 8:02 AM BY: Bnoblin
m:\0001_machado patano\2025 a&e jobs\0001.25.012_obo bayside\02-civil\03-production drawings\obo bayside garages-site.dwg

YOUR PROJECT - OUR PRIORITY - NO EXCUSES
© COPYRIGHTED MATERIAL
THESE PLANS TO VERIFY ANY CONDITIONS OR RESTRICTIONS THAT MAY HAVE BEEN REQUIRED BY THE APPROVING AUTHORITY. CONTRACTOR / SUBCONTRACTOR / AND/OR OWNER SHALL CONSULT ENGINEERED PLANS TO VERIFY ANY CONDITIONS OR RESTRICTIONS THAT MAY HAVE BEEN REQUIRED BY THE APPROVING AUTHORITY. THE DRAWINGS, DETAILS, AND NOTES THAT APPEAR ON THIS SHEET ARE COPYRIGHTED BY MACHADO | PATANO, PLLC, AND CLAIM ALL RIGHTS OF THE COPYRIGHT LAWS.

MP DESIGN GROUP
MACHADO · PATANO · KILPATRICK · JONES
918 Howard Ave Suite F
Biloxi, Mississippi 39530
P: 228.388.1950
www.mpdesigngroup.us

ALABAMA LICENSED PROFESSIONAL ENGINEER GERROD W. KILPATRICK NO. 27668 3-27-26

OBA BAYSIDE GARAGES

24689 PELICAN PL.
ORANGE BEACH, AL 36561

SCALE:	AS INDICATED
PROJECT NO:	0001.25.012
DRAWN BY:	MBN
CHECKED BY:	GWK

STORM WATER POLLUTION PREVENTION DETAILS

NO.	DATE	REVISION / SUBMITTAL
REV A	03.12.2026	CITY PERMITTING
REV B	03.27.2026	CITY PERMITTING

C610

VERIFY SCALES
BAR IS ONE INCH ON ORIGINAL DRAWING
1"
IF NOT ONE INCH ON THIS SHEET, ADJUST SCALES ACCORDINGLY

THE ORIGINAL SIGNED, DATED AND SEALED ENGINEERING PLANS ARE THE OFFICIAL DOCUMENTS SUBMITTED TO THE APPROVING AUTHORITY FOR THESE PLANS. CONTRACTOR / SUBCONTRACTOR / AND/OR OWNER SHALL CONSULT ENGINEERED PLANS TO VERIFY ANY CONDITIONS OR RESTRICTIONS THAT MAY HAVE BEEN REQUIRED BY THE APPROVING AUTHORITY OR APPROVED BY THE REGISTERED ENGINEER OF RECORD. IF DISCREPANCIES OCCUR, THE ORIGINAL SIGNED, DATED AND SEALED ENGINEERED PLAN SET SHALL OVERRIDE ANY OTHER PLANS.

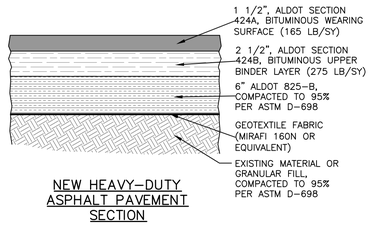

NEW HEAVY-DUTY ASPHALT PAVEMENT SECTION

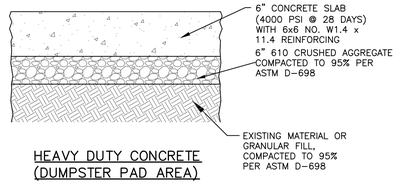

HEAVY DUTY CONCRETE (DUMPSTER PAD AREA)

1 PAVEMENT SECTION DETAILS

NOT TO SCALE

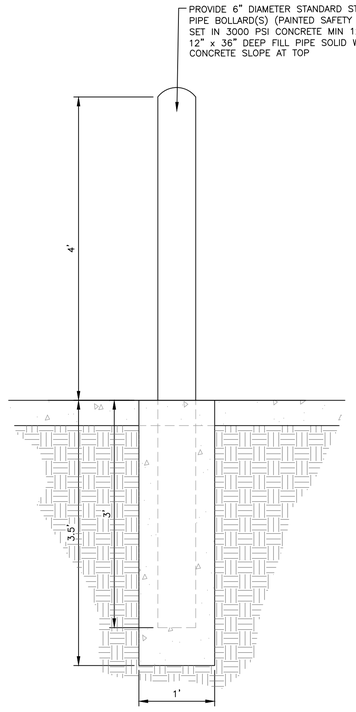

3 TYPICAL STEEL BOLLARD DETAIL

NOT TO SCALE

GENERAL NOTES

1. ALL WOOD SHALL BE PRESSURE TREATED LUMBER
2. PROVIDE STEEL SLEEVES (3/4"ø x 1 1/2", MINIMUM) TO ACCEPT GATE CANE BOLTS. PROVIDE TWO EACH AT GATE IN CLOSED AND OPEN POSITION, FIELD VERIFY EXACT LOCATION.
3. CONTRACTOR SHALL INSTALL PIPE BOLLARDS AS SHOWN ON THE SITE PLAN, SEE PIPE BOLLARD DETAIL.

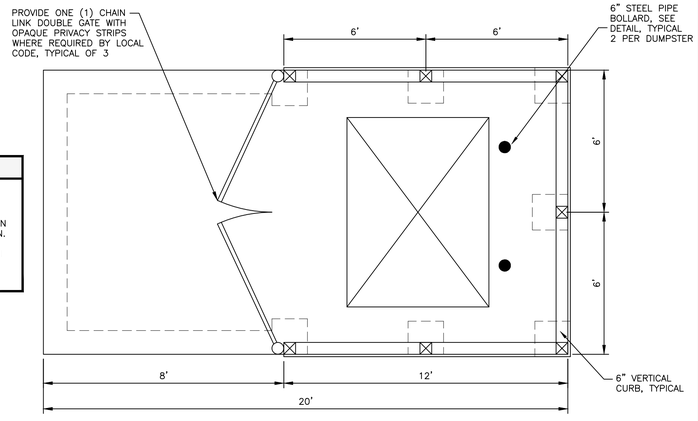

PLAN

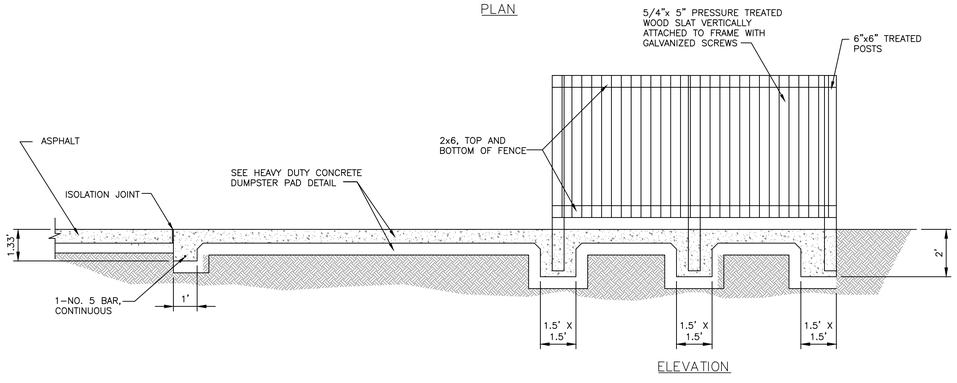

ELEVATION

2 DUMPSTER ENCLOSURE DETAIL

NOT TO SCALE

FENCE NOTES

1. CONCRETE SHALL CURE A MINIMUM OF TWO DAYS PRIOR TO THE INSTALLATION OF ANY FENCING MATERIAL.
2. ALL FENCING MATERIALS FOR CHAIN LINK FENCE SHALL BE BLACK-VINYL COATED.
3. GATES SHALL BE BUILT FROM THE FENCING MATERIAL, EQUIPPED WITH HARDWARE AND ATTACHED WITH GALVANIZED FASTENERS.

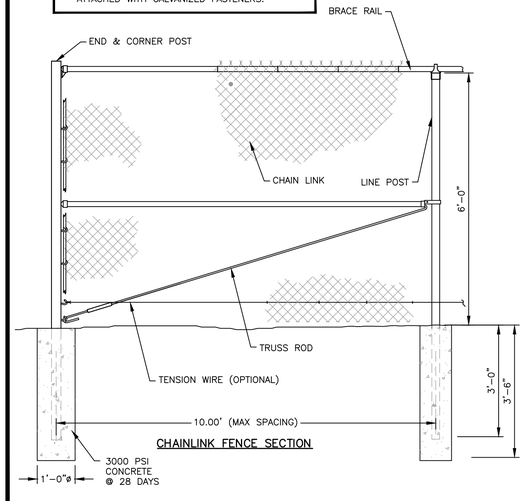

CHAINLINK FENCE SECTION

4 CHAIN LINK FENCE DETAILS

NOT TO SCALE

FENCE NOTES

1. ALL FENCING BOARDS SHALL BE 5/8" X 6", NO. 2 GRADE MATERIAL.
2. BOARDS SHALL BE CEDAR, REDWOOD, CYPRESS, OR TREATED SOUTHERN PINE.
3. POSTS SHALL BE 6" X 6" X 8'-0" PRESSURE TREATED MATERIAL.
4. HORIZONTAL RAILS SHALL BE 2" X 4" NO. 2 PRESSURE TREATED LUMBER.
5. FENCING SHALL BE INSTALLED WITH BOARDS TOWARD THE STREET AND POSTS ON THE HOMEOWNER SIDE.
6. ALL POSTS SHALL BE SET IN 2500 PSI FOOTINGS APPROXIMATELY 24" DEEP.
7. CONCRETE SHALL CURE A MINIMUM OF TWO DAYS PRIOR TO THE INSTALLATION OF ANY FENCING MATERIAL.
8. FENCING MATERIAL SHALL BE ATTACHED WITH GALVANIZED FASTENERS.
9. GATES SHALL BE BUILT FROM THE FENCING MATERIAL, EQUIPPED WITH HARDWARE AND ATTACHED WITH GALVANIZED FASTENERS.

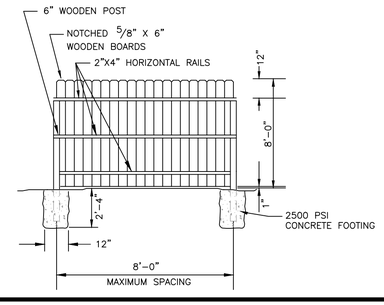

5 WOODEN FENCE DETAIL

NOT TO SCALE

THE ORIGINAL SIGNED, DATED AND SEALED ENGINEERING PLANS ARE THE OFFICIAL DOCUMENTS SUBMITTED TO THE APPROVING AUTHORITY FOR THESE PLANS. CONTRACTOR / SUBCONTRACTOR / AND/OR OWNER SHALL CONSULT ENGINEER OF RECORD IF DISCREPANCIES OCCUR. THE ORIGINAL SIGNED, DATED AND SEALED ENGINEERED PLAN SET SHALL OVERRIDE ANY OTHER PLANS, THE DRAWINGS, DETAILS, AND NOTES THAT APPEAR ON THIS SHEET ARE COPYRIGHTED BY MACHADO | PATANO, PLLC, AND ©JAM ALL RIGHTS OF THE COPYRIGHT LAWS.
© COPYRIGHTED MATERIAL
YOUR PROJECT - OUR PRIORITY - NO EXCUSES

MP DESIGN GROUP
MACHADO · PATANO · KILPATRICK · JONES
918 Howard Ave Suite F
Biloxi, Mississippi 39530
P: 228.388.1950
www.mpdesigngroup.us

ALABAMA LICENSED PROFESSIONAL ENGINEER GERROD W. KILPATRICK NO. 27668 3-27-26

OBA BAYSIDE GARAGES

24689 PELICAN PL.
ORANGE BEACH, AL 36561

SCALE: AS INDICATED
PROJECT NO: 0001.25.012
DRAWN BY: MBN
CHECKED BY: GWK

CIVIL SITE DETAILS

NO.	DATE	REVISION / SUBMITTAL
REV A	03.12.2026	CITY PERMITTING
REV B	03.27.2026	CITY PERMITTING

C620

VERIFY SCALES
BAR IS ONE INCH ON ORIGINAL DRAWING
IF NOT ONE INCH ON THIS SHEET, ADJUST SCALES ACCORDINGLY

PRINTED: 3/27/2026 8:05 AM BY: Blake Noblin LAST SAVED: 3/27/2026 8:02 AM BY: Bnoblin
m:\0001_machado patano\2025 o&e jobs\0001.25.012_oba bayside\02-civil\03-production\03-production drawings\oba bayside garages-site.dwg

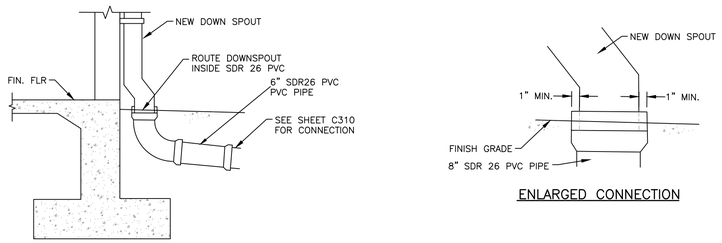

NOTE: VERIFY LOCATION OF ROOF DOWN SPOUTS WITH ARCHITECTURAL PLANS AND PLUMBING PLANS

ENLARGED CONNECTION

1 DOWN SPOUT CONNECTION DETAIL

NOT TO SCALE

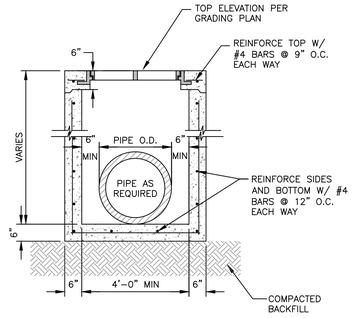

SECTION A–A

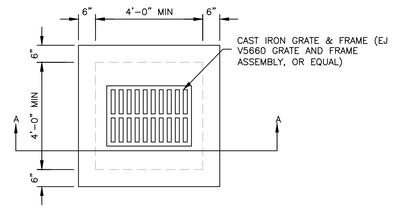

PLAN

2 DRAIN INLET DETAIL

NOT TO SCALE

RIP-RAP DETAIL NOTES

1. RIP–RAP IS REQUIRED AT ALL FLARED END SECTION AND HEADWALLS LOCATIONS
2. GEOTEXTILE FILTER FABRIC IS REQUIRED BETWEEN THE RIP–RAP AND SUB–GRADE.
3. IN A WELL–DEFINED CHANNELS, EXTEND THE RIP–RAP APRON UP THE CHANNEL BANKS ABOVE THE TAILWATER ELEVATION.

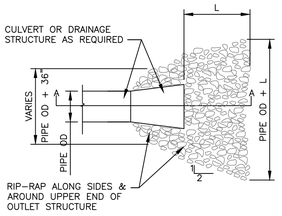

PLAN

RIP–RAP LENGTH TABLE	
PIPE DIA.	L (FT)
15"	5'
18"	8'
24"	10'
30"	12'
36"	14'
42"	16'
48"	18'
60"	20'
72"	22'

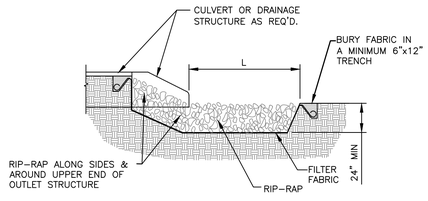

SECTION A–A

3 TYPICAL RIP-RAP OUTFALL DETAIL

NOT TO SCALE

PRINTED: 3/27/2026 8:05 AM BY: Blake Noblin LAST SAVED: 3/27/2026 8:02 AM BY: Bnoblin
m:\0001_machado patano\2025 d&e jobs\0001.25.012_oba bayside\02-civil\03-production\03-production drawings\oba bayside garages-site.dwg

THE ORIGINAL, SIGNED, DATED AND SEALED ENGINEERING PLANS ARE THE OFFICIAL DOCUMENTS SUBMITTED TO THE APPROVING AUTHORITY FOR THESE PLANS. CONTRACTOR / SUBCONTRACTOR / AND/OR OWNER SHALL CONSULT ENGINEER FOR ANY CONDITIONS OR RESTRICTIONS THAT MAY HAVE BEEN REQUIRED BY THE APPROVING AUTHORITY OR APPROVED BY THE REGISTERED ENGINEER OF RECORD. IF DISCREPANCIES OCCUR, THE ORIGINAL SIGNED, DATED AND SEALED ENGINEERED PLAN SET SHALL OVERRIDE ANY OTHER PLANS. THE DRAWINGS, DETAILS, AND NOTES THAT APPEAR ON THIS SHEET ARE COPYRIGHTED BY MACHADO | PATANO, PLLC, AND OJAM ALL RIGHTS OF THE COPYRIGHT LAWS.
YOUR PROJECT - OUR PRIORITY - NO EXCUSES
© COPYRIGHTED MATERIAL

MP DESIGN GROUP
MACHADO · PATANO · KILPATRICK · JONES
918 Howard Ave Suite F
Biloxi, Mississippi 39530
P: 228.388.1950
www.mpdesigngroup.us

ALABAMA LICENSED PROFESSIONAL ENGINEER GERROD W. KILPATRICK NO. 27668 3-27-26

OBA BAYSIDE GARAGES
24689 PELICAN PL.
ORANGE BEACH, AL 36561

SCALE:	AS INDICATED
PROJECT NO:	0001.25.012
DRAWN BY:	MBN
CHECKED BY:	GWK

SITE GRADING AND DRAINAGE DETAILS

NO.	DATE	REVISION / SUBMITTAL
REV A	03.12.2026	CITY PERMITTING
REV B	03.27.2026	CITY PERMITTING

C640

VERIFY SCALES
BAR IS ONE INCH ON ORIGINAL DRAWING
1"
IF NOT ONE INCH ON THIS SHEET, ADJUST SCALES ACCORDINGLY

WATER MAIN THRUST BLOCK NOTE

ALL FITTINGS SHALL BE COVERED WITH A GEOTEXTILE FABRIC PRIOR TO POURING CONCRETE THRUST BLOCKING

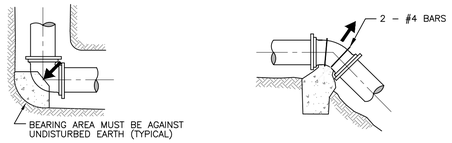

BEARING AREAS FOR THRUST BLOCKING IN SQUARE FEET						
FITTING:	4" DIA.	6" DIA.	8" DIA.	10" DIA.	12" DIA.	14" DIA.
TEES	2.0	2.5	4.7	5.0	7.0	9.0
90°	2.0	2.7	6.7	7.2	10.4	12.7
45°	1.0	1.5	3.6	3.9	5.6	6.9
22 1/2°	1.0	1.0	1.8	2.0	2.9	3.5

1 WATER MAIN THRUST BLOCK DETAILS — NOT TO SCALE

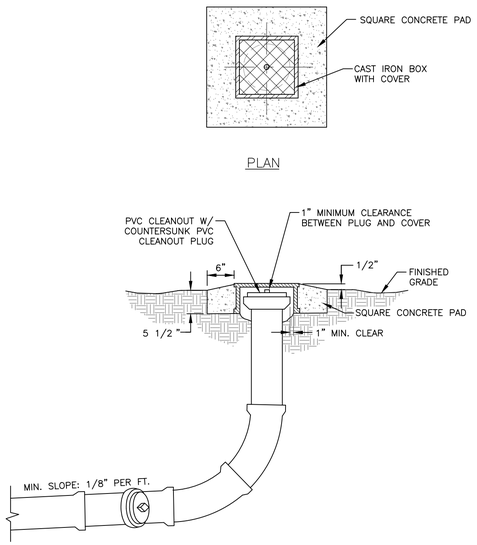

2 SEWER CLEAN OUT DETAIL — NOT TO SCALE

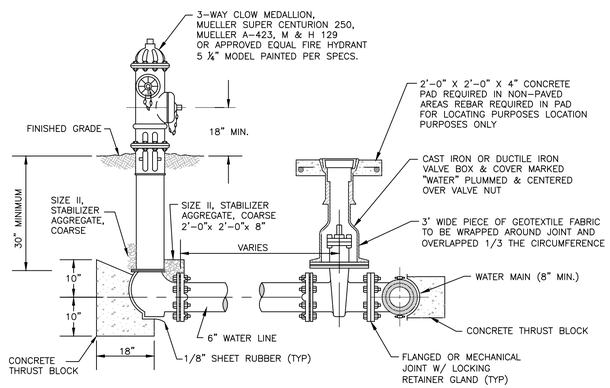

3 FIRE HYDRANT ASSEMBLY DETAIL — NOT TO SCALE

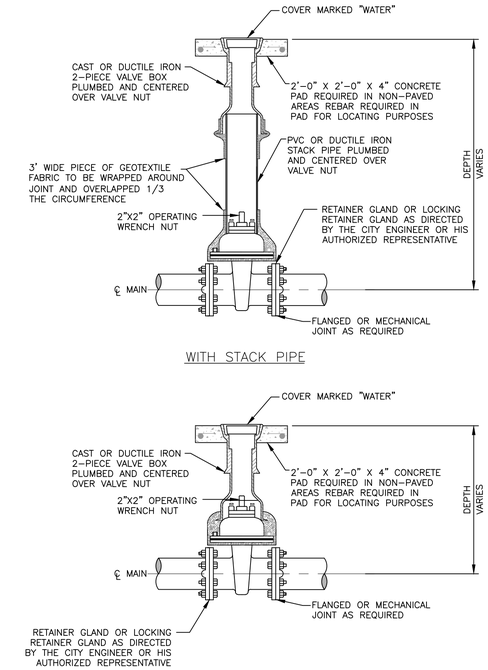

4 IN-LINE WATER VALVE AND VALVE BOX WITH AND WITHOUT STAKE PIPE DETAIL — NOT TO SCALE

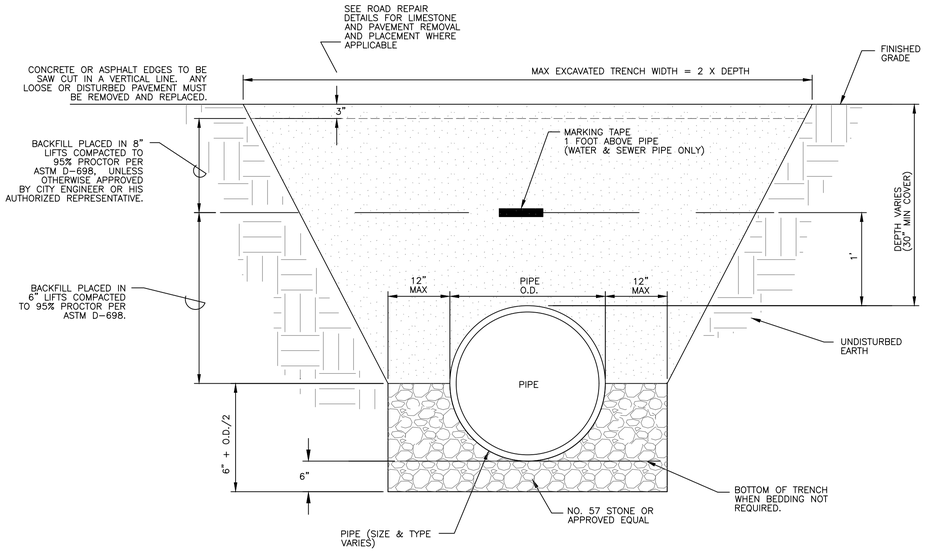

5 TRENCH DETAIL FOR SANITARY SEWER AND NON-PERFORATED STORM DRAIN PIPE — NOT TO SCALE

GENERAL NOTES

1. BACKFILL MATERIAL SHALL BE PLACED ON BOTH SIDES OF PIPE SIMULTANEOUSLY DURING BACKFILLING OPERATIONS TO PREVENT SHIFTING OR DAMAGE TO PIPE.
2. ANY MARKING TAPE ABOVE SEWER PIPE THAT IS DISTURBED OR DAMAGED BY OVERLAPPING TRENCHES SHALL BE PROPERLY REPAIRED BY THE CONTRACTOR AT NO ADDITIONAL COST TO THE OWNER.
3. INSTALLATION AND COVER REQUIREMENTS SHALL BE IN ACCORDANCE WITH THE PIPE MANUFACTURER'S WRITTEN INSTALLATION INSTRUCTIONS AND RECOMMENDATIONS.
4. TOP OF PIPE SHALL BE BELOW ROAD BASE IN PAVED AREAS.

STORM DRAIN PIPE PLACEMENT NOTES

1. STORM DRAIN PIPE SHALL BE CONCRETE, RIBBED PVC OR HIGH DENSITY POLYETHYLENE IN ACCORDANCE WITH THE SPECIFICATIONS OR AS SHOWN ON THE PLANS. LOCATION FOR INSTALLATION OF TYPE OF PIPE SHALL BE AS SHOWN ON THE DRAWINGS OR AS DIRECTED BY THE ENGINEER OR HIS AUTHORIZED REPRESENTATIVE. ONLY CONCRETE STORM DRAIN PIPE SHALL BE INSTALLED UNDER PAVED AREAS UNLESS SHOWN DIFFERENTLY ON THE CONSTRUCTION PLANS.
2. ALL STORM DRAIN JOINTS SHALL BE WRAPPED WITH GEOTEXTILE FABRIC. FABRIC SHALL BE THREE (3') FEET WIDE (CENTERED OVER JOINT) AND LONG ENOUGH TO WRAP AROUND THE PIPE JOINT AND OVERLAP 1/3 THE CIRCUMFERENCE.
3. REFER TO OTHER DETAILS FOR DRAINAGE STRUCTURES, CONCRETE PIPE REPAIR METHODS, PIPE END TREATMENTS, & GRATES.

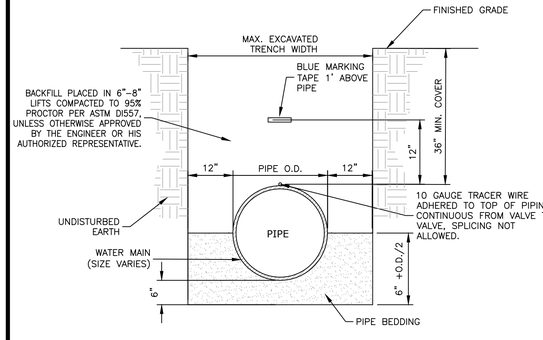

WATER PIPE PLACEMENT NOTES:

1. WATER PIPE SHALL BE PVC OR DUCTILE IRON (D.I.) IN ACCORDANCE WITH THE SPECIFICATION. LOCATION FOR INSTALLATION OF PVC OR D.I. PIPE SHALL BE AS SHOWN ON THE DRAWINGS OR AS DIRECTED BY THE ENGINEER OR HIS AUTHORIZED REPRESENTATIVE.
2. BACKFILL MATERIAL SHALL BE PLACED ON BOTH SIDES OF PIPE SIMULTANEOUSLY DURING BACKFILLING OPERATIONS TO PREVENT SHIFTING OR DAMAGE TO PIPE.
3. THERE IS A SEPARATE PAY ITEM FOR PIPE BEDDING; HOWEVER, MATERIAL USED FOR BEDDING OF PIPE SHALL BE THE SAME MATERIAL APPROVED FOR USE AS IMPORTED FILL MATERIAL.
4. "MAXIMUM EXCAVATED TRENCH WIDTH" REFERS TO THE MAXIMUM WIDTH THAT WILL BE USED FOR COMPUTATION OF APPLICABLE PAY ITEMS FOR BEDDING, BORROW FOR BACKFILL, LIMESTONE, OR PAVING. THE CONTRACTOR MAY EXCAVATE A WIDER TRENCH AT HIS OWN EXPENSE AS LONG AS THE TRENCH REMAINS WITHIN THE LIMITS OF THE R.O.W., PROPERTY OR EASEMENT AND THE ENGINEER OR HIS AUTHORIZED REPRESENTATIVE APPROVES THE DIMENSIONS OF THE WIDER TRENCH.

6 WATER MAIN PLACEMENT DETAIL — NOT TO SCALE

YOUR PROJECT - OUR PRIORITY - NO EXCUSES
© COPYRIGHTED MATERIAL
THE ORIGINAL SIGNED, DATED AND SEALED ENGINEERING PLANS ARE THE OFFICIAL DOCUMENTS SUBMITTED TO THE APPROVING AUTHORITY FOR THESE PLANS. CONTRACTOR / SUBCONTRACTOR / AND/OR OWNER SHALL CONSULT ENGINEER OR APPROVED BY THE REGISTERED ENGINEER OF RECORD. IF DISCREPANCIES OCCUR, THE ORIGINAL SIGNED, DATED AND SEALED ENGINEERED PLAN SET SHALL OVERRIDE ANY OTHER PLANS, THE DRAWINGS, DETAILS, AND NOTES THAT APPEAR ON THIS SHEET ARE COPYRIGHTED BY MACHADO | PATANO, PLLC, AND CLAIM ALL RIGHTS OF THE COPYRIGHT LAWS.

MP DESIGN GROUP
MACHADO · PATANO · KILPATRICK · JONES
918 Howard Ave Suite F
Biloxi, Mississippi 39530
P: 228.388.1950
www.mpdesigngroup.us

ALABAMA LICENSED PROFESSIONAL ENGINEER GERROD W. KILPATRICK NO. 27668 3-27-26

OBA BAYSIDE GARAGES
24689 PELICAN PL.
ORANGE BEACH, AL 36561

SCALE: AS INDICATED
PROJECT NO: 0001.25.012
DRAWN BY: MBN
CHECKED BY: GWK

SITE UTILITY DETAILS

NO.	DATE	REVISION / SUBMITTAL
REV A	03.12.2026	CITY PERMITTING
REV B	03.27.2026	CITY PERMITTING

C650

VERIFY SCALES
BAR IS ONE INCH ON ORIGINAL DRAWING
1"
IF NOT ONE INCH ON THIS SHEET, ADJUST SCALES ACCORDINGLY

PRINTED: 3/27/2026 8:05 AM BY: Blake Noblin LAST SAVED: 3/27/2026 8:02 AM BY: Bnoblin
m:\0001_machado patano\2025 o&e jobs\0001.25.012_oba bayside\02-civil\03-production\03-production drawings\oba bayside garages-site.dwg

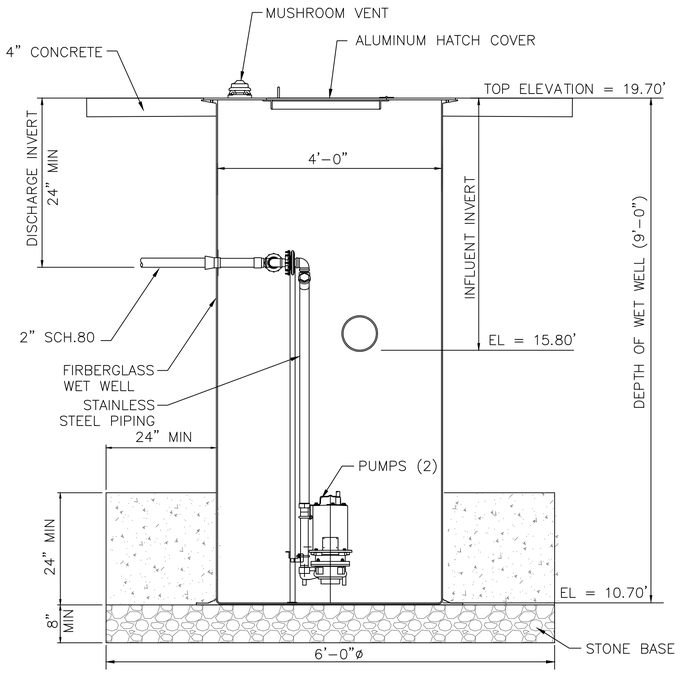

SCOPE OF WORK:
CONTRACTOR SHALL FURNISH ALL LABOR, MATERIALS, EQUIPMENT AND PERFORMANCE OF ALL WORK NECESSARY OR INCIDENTAL TO FURNISH AND INSTALL A DUPLEX PREFABRICATED FIBERGLASS REINFORCED POLYESTER (FRP) LIFT STATION. THE LIFT STATION SHALL BE A COMPLETELY FACTORY-ASSEMBLED UNIT, REQUIRING ONLY MINOR ADJUSTMENTS AND REASSEMBLY IN THE FIELD.

BASIS OF DESIGN:
PUMPS SHALL BE OF THE CENTRIFUGAL TYPE, KEEN KHGS(X)2 SERIES OR EQUAL, WITH AN INTEGRALLY BUILT-IN GRINDER UNIT AND SUBMERSIBLE TYPE MOTOR. THE GRINDER UNIT SHALL BE CAPABLE OF MACERATING ALL MATERIAL IN NORMAL DOMESTIC AND COMMERCIAL SEWAGE, INCLUDING REASONABLE AMOUNTS OF FOREIGN OBJECTS SUCH AS SANITARY NAPKINS, DISPOSABLE DIAPERS, THIN RUBBER, SMALL WOOD, PLASTIC AND THE LIKE TO A FINE SLURRY THAT WILL EASILY PASS THROUGH THE PUMP AND 2" NPT DISCHARGE.

DESIGN LIFT STATION DATA	
MOTOR SIZE	2 HP
VOLTAGE	208
PHASE	3
FORCE MAIN SIZE	2"

1 GRINDER PUMP STATION

NOT TO SCALE

PRINTED: 3/27/2026 8:05 AM BY: Blake Noblin LAST SAVED: 3/27/2026 8:02 AM BY: Bnoblin
m:\0001_machado patano\2025 a&e jobs\0001.25.012_oba bayside\02-civil\03-production\03-production drawings\oba bayside garages-site.dwg

THE ORIGINAL SIGNED, DATED AND SEALED ENGINEERING PLANS ARE THE OFFICIAL DOCUMENTS SUBMITTED TO THE APPROVING AUTHORITY FOR THESE PLANS. CONTRACTOR / SUBCONTRACTOR / AND/OR OWNER SHALL CONSULT ENGINEERED PLANS TO VERIFY ANY CONDITIONS OR RESTRICTIONS THAT MAY HAVE BEEN REQUIRED BY THE APPROVING AUTHORITY OR APPROVED BY THE REGISTERED ENGINEER OF RECORD. IF DISCREPANCIES OCCUR, THE ORIGINAL SIGNED, DATED AND SEALED ENGINEERED PLAN SET SHALL OVERRIDE ANY OTHER PLANS. THE DRAWINGS, DETAILS, AND NOTES THAT APPEAR ON THIS SHEET ARE COPYRIGHTED BY MACHADO | PATANO, PLLC, AND OJAM ALL RIGHTS OF THE COPYRIGHT LAWS.
© COPYRIGHTED MATERIAL
YOUR PROJECT - OUR PRIORITY - NO EXCUSES

MP DESIGN GROUP
MACHADO · PATANO · KILPATRICK · JONES
918 Howard Ave Suite F
Biloxi, Mississippi 39530
P: 228.388.1950
www.mpdesigngroup.us

ALABAMA LICENSED PROFESSIONAL ENGINEER GERROD W. KILPATRICK NO. 27668 3-27-26

OBA BAYSIDE GARAGES
24689 PELICAN PL.
ORANGE BEACH, AL 36561

SCALE: AS INDICATED
PROJECT NO: 0001.25.012
DRAWN BY: MBN
CHECKED BY: GWK

SITE UTILITY DETAILS

NO.	DATE	REVISION / SUBMITTAL
REV A	03.12.2026	CITY PERMITTING
REV B	03.27.2026	CITY PERMITTING

C651

VERIFY SCALES
BAR IS ONE INCH ON ORIGINAL DRAWING 1"
IF NOT ONE INCH ON THIS SHEET, ADJUST SCALES ACCORDINGLY

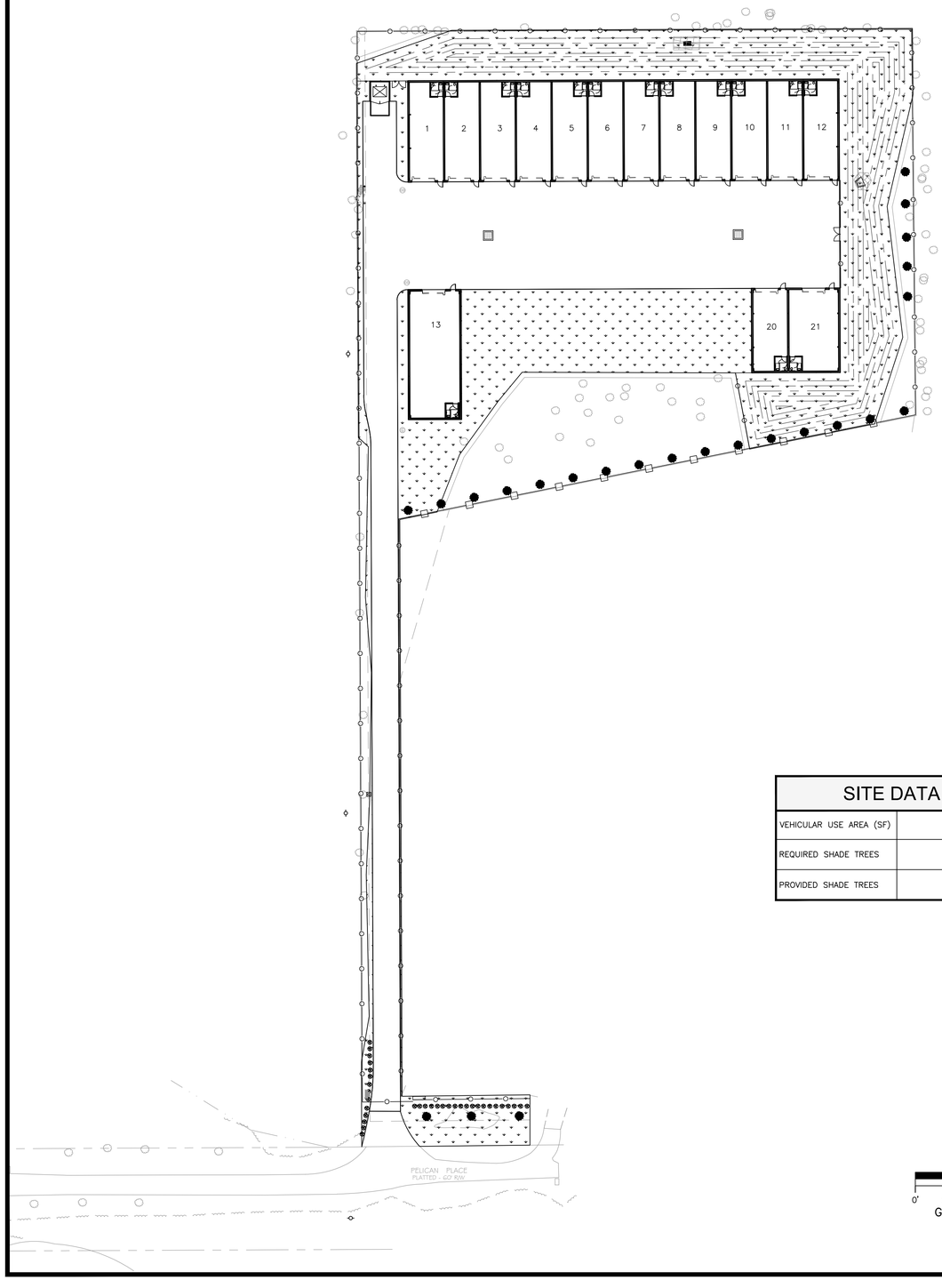

GENERAL LANDSCAPE NOTES

1. IIF THE LANDSCAPE CONTRACTOR IN THE COURSE OF THE WORK, FINDS OR SUSPECTS A DISCREPANCY BETWEEN THE DRAWINGS AND PHYSICAL CONDITIONS OF SITE, OR WORK, OR ANY ERRORS OR OMISSIONS IN THE CONTRACT DRAWINGS OR SPECIFICATIONS, HE SHALL IMMEDIATELY NOTIFY THE ENGINEER IN WRITING, AND THE ENGINEER WILL PROMPTLY VERIFY THE SAME. ANY WORK DONE AFTER SUCH DISCOVERY, UNLESS AUTHORIZED, SHALL BE DONE AT THE LANDSCAPE CONTRACTOR'S RISK.
2. THE LANDSCAPE CONTRACTOR IS RESPONSIBLE FOR VERIFYING PROJECT SITE CONDITIONS AND QUANTITIES INDICATED ON THESE PLANS, BEFORE PRICING WORK. ESTIMATED QUANTITIES ARE PROVIDED FOR THE CONTRACTORS CONVENIENCE ONLY.
3. PLANT MATERIAL SHALL BE NURSERY GROWN IN ACCORDANCE WITH AMERICAN STANDARDS FOR NURSERY STOCK, LATEST EDITION.
4. PLANTS SHALL BE SOUND, HEALTHY AND VIGOROUS, WELL–BRANCHED AND DENSELY FOLIATED WHEN IN LEAF. THEY SHALL BE FREE OF DISEASE, INSECTS, EGGS, OR LARVAE, AND SHALL HAVE HEALTHY, WELL DEVELOPED ROOT SYSTEMS. THEY SHALL BE FREE PROM PHYSICAL DAMAGE OR ADVERSE CONDITIONS THAT WOULD PREVENT THRIVING GROWTH.
5. PLANTS SHALL BE CONTAINER GROWN OR B&B AS INDICATED IN THE PLANT LIST.
6. PLANTS SHALL CONFORM TO THE VARIETIES INDICATED IN THE PLANT LIST.
7. SUBSTITUTION OF PLANT MATERIALS WILL NOT BE PERMITTED UNLESS AUTHORIZED BY THE ENGINEER. IF PROOF IS SUBMITTED THAT ANY PLANT SPECIFIED IS NOT OBTAINABLE, A PROPOSAL WILL BE CONSIDERED FOR USE OF THE NEAREST EQUIVALENT SIZE OR VERIFY WITH CORRESPONDING ADJUSTMENT OF CONTRACT PRICES.
8. PLANT MATERIAL LOCATIONS AND BED OUTLINES SHALL BE STAKED OR FLAGGED ON SITE BY THE LANDSCAPE CONTRACTORS AND SHALL BE ADJUSTED IF REQUIRED TO FIT ACTUAL AS–BUILT CONDITIONS ON SITE. THE LANDSCAPE CONTRACTOR SHALL NOTIFY THE ENGINEER 24 HOURS (MIN.) PRIOR TO INSTALLATION FOR APPROVAL OF PLANT LOCATIONS AND BED OUTLINES.
9. LANDSCAPE CONTRACTOR SHALL STAKE THE LOCATION OF ALL TREES PROVIDING A MINIMUM OF 5' CLEARANCE FROM STRUCTURES AND/OR UTILITIES. UPON APPROVAL OF STAKE LOCATIONS BY ENGINEER, CONTRACTOR SHALL PROCEED WITH TREE INSTALLATION. PLAN LOCATION OF TREES IS SCHEMATIC ONLY. CONTRACTOR SHALL VERIFY LOCATION OF ALL UNDERGROUND UTILITIES AND DRAINAGE STRUCTURES PRIOR TO EXCAVATION WORK.
10. IN PLANTING BEDS, SOIL GRADES SHALL BE ESTABLISHED BY THE LANDSCAPE CONTRACTOR AT APPROXIMATELY 3 INCHES BELOW CURBS, SIDEWALKS, HARDSCAPE AMENITIES, MOWING STRIPS, AND ABUTMENTS. BEGIN APPROX. 3' AWAY PROM SAID STRUCTURES AND TAPER DOWN TO 3" AT STRUCTURE TO PREVENT MULCH WASH–OUT.
11. THE LANDSCAPE CONTRACTOR SHALL EXCAVATE PLANT PITS ACCORDING TO THE DETAILS AND SPECIFICATIONS.
12. BACKFILL AROUND PLANT MATERIAL SHALL BE WORKED FIRMLY, TAMPED AND WATERED–IN UNDER AND AROUND THE ROOT BALL TO FILL ALL VOIDS. ADD BACKFILL, AS REQUIRED, TO RE–ESTABLISH SURFACE LEVEL IN ACCORDANCE WITH DETAILS AND GENERAL PLANT CULTIVATION PRACTICES.
13. THE LANDSCAPE CONTRACTOR SHALL BEAR FINAL RESPONSIBILITY FOR PROPER SURFACE DRAINAGE OF PLANTED AREAS. ANY DISCREPANCY IN THE DRAWINGS, OBSTRUCTION ON THE SITE, OR PRIOR
14. WORK DONE BY ANOTHER PARTY WHICH THE LANDSCAPE CONTRACTOR FEELS PRECLUDES STABLISHING PROPER DRAINAGE SHALL BE IMMEDIATELY BROUGHT TO THE ATTENTION OF THE ENGINEER.
15. AFTER PLANT MATERIAL HAS BEEN INSTALLED AND APPROVED, PLANTING BEDS SHALL BE RAKED TO AN EVEN GRADE TO CONFORM TO PRE–MULCH FINISH GRADES. PLANTING BEDS AND PLANT SAUCERS SHALL THEN BE UNIFORMLY COVERED WITH A MINIMUM 3–INCH LAYER OF MULCH.
16. PLANT MATERIAL BACKFILL MIXTURE SHALL BE THOROUGHLY MIXED AND DISTRIBUTED EVENLY THROUGHOUT THE PROPOSED PLANTING BED AREAS.
17. TREES SHALL BE STAKED UNLESS OTHERWISE DIRECTED BY THE ENGINEER. REFER TO STAKING AND PLANTING DETAILS ON THE DRAWINGS.
18. THE LANDSCAPE CONTRACTOR SHALL FULLY MAINTAIN PLANT MATERIAL ON SITE DURING AND BEFORE PLANTING, UNTIL THE WORK IS ACCEPTED BY THE ENGINEER.
19. INSTALLED PLANTS SHALL BE GUARANTEED BY THE LANDSCAPE CONTRACTOR TO BE HEALTHY PLANTS AND IN FLOURISHING CONDITION OF ACTIVE GROWTH FOR ONE (I) YEAR PROM FINAL INSPECTION AND ACCEPTANCE BY THE OWNER AND ENGINEER.
20. THE ENGINEER HAS THE RIGHT TO REJECT ANY AND ALL WORK WHICH IN HIS OPINION DOES NOT MEET WITH THE REQUIREMENTS OF THE SPECIFICATIONS AT ANY STAGE OF THE PROJECT.
21. IN GENERAL, THE WORK SHALL PROCEED AS RAPIDLY AS THE SITE BECOMES AVAILABLE.
22. THE LANDSCAPE CONTRACTOR SHALL BE RESPONSIBLE FOR THE IMMEDIATE CLEANUP OF PREMISES AND REMOVAL OF DISCARDED AND SURPLUS MATERIALS AND RUBBISH.
23. LOCATION AND AMOUNT OF SOD AS SHOWN TO FIT CONDITIONS.
24. GRASS FOR SODDING SHALL BE FRESHLY CUT IN ONE FOOT WIDE BY TWO FEET LONG SECTIONS. SOD SHALL BE HEALTHY, FREE OF INSECTS AND WEEDS, AND IN NATURALLY FLOURISHING CONDITION. DRY, BROWN, AND UNFRESH SOD WILL BE REJECTED.
25. SOD SHALL BE LAID END–TO–END AND SIDE–TO–SIDE IN A STAGGERED LINE TO FORM A UNIFORM LAYER. UNEVEN EDGES SHALL BE SQUARELY TRIMMED TO ALLOW CLOSE AND FIRM FITTING OF EACH PIECE.
26. AFTER SODDING IS COMPLETED, THE ENTIRE SOD AREAS SHALL BE ROLLED AND WATERED BY HAND OR IRRIGATION SYSTEM. WATERING SHALL CONTINUE EACH DAY FOR TWO WEEKS. SODDED AREAS SHALL THEN BE TOP–DRESSED WITH A COMMERCIAL FERTILIZER, AS RECOMMENDED

PLANT SCHEDULE

SCIENTIFIC NAME	COMMON NAME	SIZE	QUANTITY
LIGUSTRUM JAPONICUM	WAXLEAF PRIVET	3 GALLON	34
ACER RUBRUM	RED MAPLE	7 GALLON	24
EREMOCHLOA OPHIUROIDES	CENTIPEDE	BY CONTRACTOR	BY CONTRACTOR

SITE DATA TABLE

VEHICULAR USE AREA (SF)	27,099
REQUIRED SHADE TREES	21
PROVIDED SHADE TREES	24

LEGEND

WAXLEAF PRIVET

RED MAPLE

SOLID SODDING

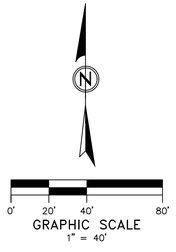

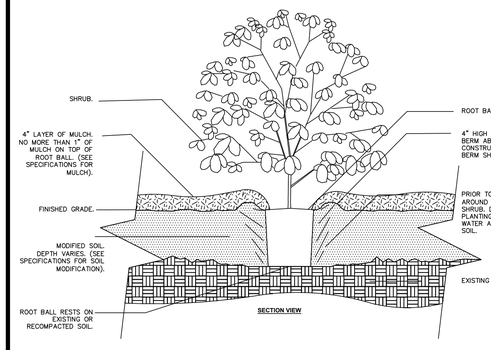

NOTES:
1. SHRUBS SHALL BE OF QUALITY DESCRIBED IN THE MASTER PLANT MATERIAL SCHEDULE.
2. SOAK ROOT BALL AND PLANT PIT IMMEDIATELY AFTER INSTALLATION.
3. REMOVE EXCESS SOIL FROM SITE AND DISPOSE OF IN LEGAL MANNER.
4. RESEED UNMULCHED, DISTURBED AREAS.

1 SHRUB PLANTING DETAIL

NOT TO SCALE

THE ORIGINAL SIGNED, DATED AND SEALED ENGINEERING PLANS ARE THE OFFICIAL DOCUMENTS SUBMITTED TO THE APPROVING AUTHORITY FOR THESE PLANS. CONTRACTOR / AND/OR OWNER SHALL CONSULT ENGINEER OR APPROVED BY THE REGISTERED ENGINEER OF RECORD. IF DISCREPANCIES OCCUR, THE ORIGINAL SIGNED, DATED AND SEALED ENGINEERED PLAN SET SHALL OVERRIDE ANY OTHER PLANS. THE DRAWINGS, DETAILS, AND NOTES THAT APPEAR ON THIS SHEET ARE COPYRIGHTED BY MACHADO | PATANO, PLLC, AND CLAIM ALL RIGHTS OF THE COPYRIGHT LAWS.
YOUR PROJECT - OUR PRIORITY - NO EXCUSES
© COPYRIGHTED MATERIAL

MP DESIGN GROUP
MACHADO · PATANO · KILPATRICK · JONES
918 Howard Ave Suite F
Biloxi, Mississippi 39530
P: 228.388.1950
www.mpdesigngroup.us

ALABAMA LICENSED PROFESSIONAL ENGINEER GERROD W. KILPATRICK NO. 27668 3-27-26

OBA BAYSIDE GARAGES
24689 PELICAN PL.
ORANGE BEACH, AL 36561

SCALE: AS INDICATED
PROJECT NO: 0001.25.012
DRAWN BY: MBN
CHECKED BY: GWK

LANDSACPE PLAN

NO.	DATE	REVISION / SUBMITTAL
REV A	03.12.2026	CITY PERMITTING
REV B	03.27.2026	CITY PERMITTING

L100

VERIFY SCALES
BAR IS ONE INCH ON ORIGINAL DRAWING
1"
IF NOT ONE INCH ON THIS SHEET, ADJUST SCALES ACCORDINGLY

PRINTED: 3/27/2026 8:05 AM BY: Blake Noblin LAST SAVED: 3/27/2026 8:02 AM BY: Bnoblin
m:\0001_machado patano\2025 o&e jobs\0001.25.012_oba bayside\02-civil\03-production\03-production drawings\oba bayside garages-site.dwg